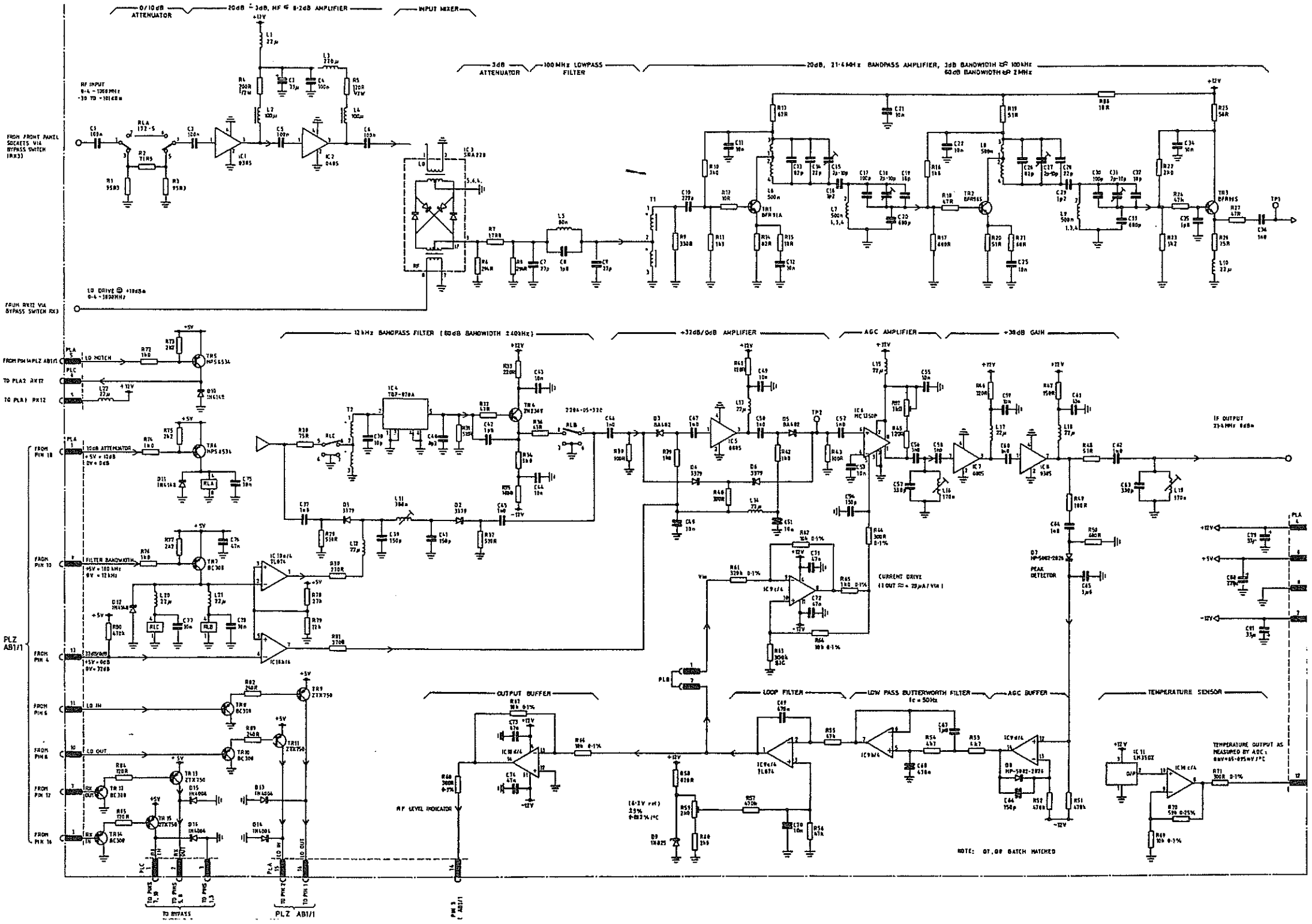
0/10dB ATTENUATOR
20dB ± 3dB, HF @ 8.2dB AMPLIFIER
INPUT MIXER
3dB ATTENUATOR
100MHz LOWPASS FILTER
20dB, 21.4MHz BANDPASS AMPLIFIER, 3dB BANDWIDTH @ 100kHz
60dB BANDWIDTH @ 2MHz
RF INPUT
FROM FRONT PANEL SOCKETS VIA BYPASS SWITCH
FROM RX12 VIA BYPASS SWITCH
12kHz BANDPASS FILTER (60dB BANDWIDTH 2400Hz)
+32dB/0dB AMPLIFIER
AGC AMPLIFIER
+38dB GAIN
IF OUTPUT 21.4MHz 0dBm
10dB ATTENUATOR
FILTER BANDWIDTH
CURRENT DRIVE
PEAK DETECTOR
OUTPUT BUFFER
LOOP FILTER
LOW PASS BUTTERWORTH FILTER
AGC BUFFER
TEMPERATURE SENSOR
TEMPERATURE OUTPUT AS MEASURED BY ADC
RF LEVEL INDICATOR
NOTE: DT,DP BATCH MATCHED
TO BYPASS
PLZ AB1/1