SE LABS
071990

INSTRUCTION MANUAL

SERIES
20
PULSE GENERATORS

RACAL-DANA

RACAL
The Electronics Group

PUBLICATION NO. 980589

SERIES 20 PULSE GENERATORS

INCLUDES:

P24 OPERATORS MANUAL

P25 OPERATORS & MAINTENANCE MANUAL

THIS PRODUCT PREVIOUSLY MANUFACTURED BY
INTERSTATE ELECTRONICS CORPORATION

RACAL-DANA

RACAL-DANA INSTRUMENTS INC.
4 Goodyear Street, P.O. Box C-19541, Irvine, CA 92713
Telephone: 714/859-8999, TWX: 910-595-1136, TLX: 67-8341

RACAL-DANA INSTRUMENTS LTD.
Hardley Industrial Estate, Hythe, Southampton, Hampshire, S04 6ZH, England
Telephone: (0703) 843265, FAX: (0703) 848919, TLX: 47600

RACAL-DANA INSTRUMENTS S.A.
18 Avenue Dutartre, 78150 Le Chesnay, France
Telephone: (1) 3-955-8888, TLX: 697 215

RACAL-DANA INSTRUMENTS GmbH.
Hermannstrasse 29, D-6078 Neu Isenburg, Federal Republic of Germany
Telephone: 06102-2861/2, TLX: 412896

RACAL-DANA INSTRUMENTS ITALIA srl.
Via Mecenate 84/A, 20138 Milano MI, Italy
Telephone: (02) 5062767, (02) 5052686, (02) 503444; TLX: 315697

RACAL

PUBLICATION DATE: AUGUST 1985

Copyright © 1985 by Racal-Dana Instruments, Inc. Printed in the United States of America. All rights reserved.
This book or parts thereof may not be reproduced in any form without written permission of the publishers.

WARRANTY

Within one year of purchase, Racal-Dana will repair or replace your instrument, at our option, if in any way it is defective in material or workmanship. The instrument must be returned to the country of purchase, unless prior arrangement has been made, and Racal-Dana Instruments will pay all parts and labor charges. Just call Racal-Dana Customer Service at (714) 859-8999 in U.S.A., (0703) 843265 in England, (1) 3-955-8888 in France, 06102-2861/2 in Germany or (02) 5062767, 5052686, or 503444 in Italy for assistance. We will advise you of the proper shipping address for your prepaid shipment. Your instrument will be returned to you freight prepaid.

PROPRIETARY NOTICE

This document and the technical data herein disclosed, are proprietary to Racal-Dana Instruments, Inc., and shall not, without express written permission of Racal-Dana Instruments, Inc., be used, in whole or in part to solicit quotations from a competitive source or used for manufacture by anyone other than Racal-Dana Instruments, Inc. The information herein has been developed at private expense, and may only be used for operation and maintenance reference purposes or for purposes of engineering evaluation and incorporation into technical specifications and other documents which specify procurement of products from Racal-Dana Instruments, Inc.

FOR YOUR SAFETY

Before undertaking any maintenance procedure, whether it be a specific troubleshooting or maintenance procedure described herein or an exploratory procedure aimed at determining whether there has been a malfunction, read the applicable section of this manual and note carefully the **WARNING** and **CAUTION** notices contained therein.

The equipment described in this manual contains voltage hazardous to human life and safety and which is capable of inflicting personal injury. The cautionary and warning notes are included in this manual to alert operator and maintenance personnel to the electrical hazards and thus prevent personal injury and damage to equipment.

If this instrument is to be powered from the AC line (mains) through an autotransformer (such as a Variac or equivalent) ensure that the common connector is connected to the neutral (earthed pole) of the power supply.

Before operating the unit ensure that the protective conductor (green wire) is connected to the ground (earth) protective conductor of the power outlet. Do not defeat the protective feature of the third protective conductor in the power cord by using a two conductor extension cord or a three-prong/two-prong adaptor.

Maintenance and calibration procedures contained in this manual sometimes call for operation of the unit with power applied and protective covers removed. Read the procedures carefully and heed Warnings to avoid "live" circuit points to ensure your personal safety.

Before operating this instrument:

1. Ensure that the instrument is configured to operate on the voltage available at the power source. See Installation Section.

2. Ensure that the proper fuse is in place in the instrument for the power source on which the instrument is to be operated.

3. Ensure that all other devices connected to or in proximity to this instrument are properly grounded or connected to the protective third-wire earth ground.

If at any time the instrument:

- Fails to operate satisfactorily
- Shows visible damage
- Has been stored under unfavorable conditions
- Has sustained stress

It should not be used until its performance has been checked by qualified personnel.

ADDENDUM

June 7, 1984

If a different connector at the end of the power cord is desired, clip off the existing connector and strip back the wires as required.

The table below describes the color coding of the wires:

Wire Color	Description
Black	Line, Hi
White	Line, Lo
Green	Ground

CONTENTS

Paragraph		Page
	Section 1. SPECIFICATIONS AND INSTALLATION	
1-1	Introduction	1-1
1-2	Receiving and Inspection	1-1
1-3	Installation	1-1
1-4	Power Requirement	1-1
1-5	Repackaging	1-2
1-6	Disassembly	1-2
1-7	Specifications	1-2
	Section 2. OPERATING INSTRUCTIONS	
2-1	Introduction	2-1
2-2	Operating Notes	2-1
	a. Use With Oscilloscopes	2-1
	b. Self Test	2-2
	c. Initial Turn-On	2-2
	d. Complementary Pulse Outputs	2-3
2-3	Controls and Indicators	2-3
	Section 3. CIRCUIT DESCRIPTION	
3-1	Introduction	3-1
3-2	Power Supply	3-1
	a. Unregulated DC and Rectifiers	3-1
	b. Regulated Supplies	3-1
3-3	Clock	3-1
	a. Current Control	3-1
	b. Triangular Waveform	3-3
	c. Square (Digital) Waveform	3-3

Paragraph		Page
3-4	Trigger	3-3
3-5	Logic	3-3
3-6	Delay	3-3
3-7	Width	3-3
3-8	Rise/Fall	3-4
3-9	(Deleted)	3-4
3-10	Output Amplifier	3-4
3-11	Offset	3-4
3-12	Attenuator Assembly	3-4

Section 4. CALIBRATION AND PERFORMANCE TESTS

4-1	Introduction.	4-1
4-2	Suggested Receiving Inspection Tests	4-1
	a. Equipment Required	4-1
	b. Procedure	4-1
4-3	Calibration Test Procedures	4-2
	a. Test Equipment List	4-2
	b. Procedure	4-2

Section 5. MAINTENANCE

5-1	Introduction.	5-1
5-2	Fault Isolation	5-1
5-3	Logic Section	5-1

ILLUSTRATIONS

Figure		Page
	Section 1. SPECIFICATIONS AND INSTALLATION	
	SERIES 20 Data Sheets	1-3
	Section 2. OPERATING INSTRUCTIONS	
2-1	Front Panel Controls and Indicators	2-4
	Section 3. CIRCUIT DESCRIPTION	
3-1	Simplified Block Diagram — P24 and P25 Pulse Generators	3-2
	Section 4. CALIBRATION AND PERFORMANCE TESTS	
4-1	Adjustment and Test Point Location Diagram	4-11
	Section 5. MAINTENANCE	
5-1	NORMAL Mode Signal Flow Diagram	5-3
5-2	DUTY CYCLE Mode Signal Flow Diagram	5-3
5-3	DBL PULSE Mode Signal Flow Diagram	5-4
5-4	TRIGGER Mode Signal Flow Diagram	5-4
5-5	TRIGGER DBL PULSE Mode Signal Flow Diagram	5-5
5-6	GATE Mode Signal Flow Diagram	5-5
5-7	AMPLIFIER Mode Signal Flow Diagram	5-6
5-8	Output Signal Flow Diagram	5-6
5-9	Simplified Logic Signal Flow Diagram	5-7

TABLES

Table		Page
	Section 2. OPERATING INSTRUCTIONS	
2-1	Functions of Front Panel Controls and Indicators	2-5
	Section 4. CALIBRATION AND PERFORMANCE TESTS	
4-1	Required Test Equipment	4-3
4-2	Calibration Test Procedure	4-3

Section 1
SPECIFICATIONS AND INSTALLATION

1-1 INTRODUCTION

This manual has been prepared to complement your Racal-Dana SERIES 20 pulse generator by providing data on its operation, maintenance, and performance. Although this manual is intended as an aid for the user as well as the calibration or maintenance technician, every effort has been made to design the pulse generators so that constant reference to this manual is not required to operate the equipment.

1-2. RECEIVING AND INSPECTION

Immediately upon receipt of the instrument, inspect the exterior of the shipping container for physical damage and notify the carrier if any damage is visible. After carefully removing all packing materials, inspect the instrument for dents or mars and confirm that the electrical performance meets or exceeds the specifications as soon as possible. Paragraph 4-2 in Section 4 contains a suggested receiving performance test procedure that may be used.

1-3..INSTALLATION

This instrument may be used on the workbench or it may be rigidly mounted in a RETMA rack structure by means of an optional rack mounting kit. As initially shipped in the bench-use configuration, the instrument has a bottom-mount tilt mechanism that must be removed for proper rack mounting. Detailed installation instructions of this feature are provided with the rack-mount kit.

This all solid-state instrument requires no special cooling facilities except that care must be taken to ensure that a 2-inch minimum clearance is provided at the rear of the instrument for proper convection cooling.

1-4. POWER REQUIREMENT

This instrument operates from a-c power only from 48 to 440 Hz. Normal input voltages of 115 or 230V ac ±10% may be selected by a rear-panel slide switch. If lower than normal voltages are available (100 or 200V ac ±10%) the FINE ADJ slide switch should be placed in the LOW position.

NOTE

Be certain to check that the correct fuse is installed for the line voltage selected.

CAUTION

Operation at the wrong power line voltage switch setting may damage the instrument.

A three-conductor line cord is supplied with the equipment to permit referencing the chassis and case to power system ground. This safety feature is recommended by the National Electrical Manufacturers Association (NEMA). The offset pin on the power cord connector is the ground wire.

1-5. REPACKAGING

If it becomes necessary to pack the instrument for shipment, the following procedure is recommended:

a. Attach a tag bearing the owner's name, address, and telephone number together with a brief description of the purpose of the shipment and the date its return is desired.

b. Wrap the equipment in heavy paper or plastic before placing it in an inner container.

c. Liberally use soft packing material around all sides of the instrument inside the inner container.

d. Enclose the inner container in a rugged carton or wood box with suitable packaging material to prevent movement in any direction and seal the outer container with heavy tape or metal bands.

e. Mark the shipping container with the shipping address and "DELICATE INSTRUMENT" labels.

1-6. DISASSEMBLY

To remove the pulse generator from its case, remove the four 6-32 retaining screws from the bottom of the case and slide the electronics forward.

1-7. SPECIFICATIONS

The following data sheets provide the specifications on the P24 and P25 pulse generators. While these data sheets represent the most accurate information available at the time of publication, Racal-Dana reserves the right to modify the specifications at any time.

MODEL P24 SPECIFICATIONS

Pulse Characteristics

Polarity: Single-channel output, switchable positive or negative going with separately adjustable offset and amplitude. Will withstand direct short to ground without damage.

Repetition Rate: 1 Hz to 50 MHz, in 4 ranges with continuously adjustable coarse and fine vernier adjustment. 100:1 adjustment on lowest 3 ranges. 50:1 on 50 MHz range.

Width: Less than 100 nanoseconds to 1 second in 4 ranges with continuous 100:1 adjustment in any range.

Delay: Adjustable from less than 10 nanoseconds to 1 second with respect to sync output in 4 ranges with continuous 100:1 vernier adjustment in any range.

Jitter: Rate, delay, and width jitter less than 0.1% + 50 picoseconds.

Amplitude with 50-Ohm Termination: 10, 5, and 1V ranges with continuous 10:1 adjustment in any range.

Amplitude into Open Circuit: 5 and 1V ranges, double in amplitude to produce amplitudes to 10V.

Offset: Positive polarity pulse baseline adjustable +1 to −6V with 50-ohm load, +2 to −12V into open circuit. Negative polarity pulse baseline adjustable −1 to +6V with 50-ohm load, −2 to +12V into open circuit, independent of attenuator setting (disabled on 10V attenuator setting).

Output Impedance: 50 ohms, constant for any amplitude vernier setting on 1 and 5V ranges; internal 50-ohm source disconnected on 10V range.

Rise/Fall Times: Adjustable from 5 nanoseconds to 0.5 seconds in 4 ranges with separate 100:1 vernier adjustments of rise and fall times. Rise and fall times are linear to greater than 95% between 10 and 90% points for times greater than 30 nanoseconds.

Aberrations: Overshoot, preshoot, and ringing less than 5% of pulse amplitude.

Duty Cycle: Delay and repetition rate greater t' an 75% of period for rates to 10 MHz, decreasing to 50% at 50 MHz in all modes except constant duty cycle (see below).

Modes

Normal: Internal clock provides trigger for standard delay and width functions.

Constant Duty Cycle: Duty cycle of pulse set by width vernier as percent of pulse period and maintained essentially constant over entire pulse rate range. Duty cycle continuously adjustable from 5 to 95% of period with pulse rates to 1 MHz, decreasing to 50% duty cycle at 50 MHz.

Double Pulse: Provides two pulses for each generator cycle. Pulses separated by delay period. Maximum effective rate is 50 MHz (internal clock at 25 MHz).

Trigger: Manual or external trigger (0.7 Vp-p min., 35V max.) at trigger input generates one complete pulse cycle. Threshold adjustable ±5V with trigger level control. Trigger slope switch selects positive- or negative-going edge of external signal. Input impedance is 1 kilohm in parallel with 15 picofarads.

Gate: Manual or external signal at trigger input enables generator for duration of applied signal. Last cycle is completed even if gate is removed in mid-cycle.

Triggered Double Pulse: Same as triggered pulse except two pulses separated by delay period are initiated with each trigger command.

Pulse Amplifier: External waveform applied to input BNC connector is squared and applied directly to output amplifier. Offset, amplitude, and rise/fall controls may be independently adjusted as in normal mode. May be activated with manual trigger.

Trigger Light: Glows whenever internal clock of external trigger is providing adequate trigger to following circuits and sync output. Will blink at extremely slow trigger rates. In constant duty cycle mode, light goes out if pulsewidth settings are either too narrow or too wide for proper operation.

Auxiliary Outputs

Sync Output: Nominal 0 to +2.5V into open circuit (TLL compatible). Rise/fall time is less than 5 nanoseconds. Output impedance is 50 ohms. Square wave except in duty cycle mode where duty cycle is identical to main output and external modes where duty cycle is identical with external drive signal. Occurs in all modes of operation.

Clock Output: Nominal 0 to +2.5V into open circuit (TTL compatible). Rise/fall time is less than 5 nanoseconds. Output impedance is 50 ohms. Square wave in all modes, coherent with main output in normal and duty cycle modes, and during gate interval. Nonsynchronous free-running in trigger and pulse amplifier modes.

Environmental Characteristics

Power: Switch-selectable 100, 115, 200, or 230 Vac ±10%, 48 to 440 Hz, 75W max.

Operating Temperature: 0° to 50°C.

Physical Characteristics

Dimensions: 17 in. wide x 3-1/2 in. high x 13-1/2 in. deep (43.18 cm x 8.89 cm x 34.29 cm)

Weight: 15.5 pounds, net (7.1 kilograms).

NOTE: Except where otherwise noted, all specifications apply with 50 ohm resistive load, 5V output level, zero offset, amplitude verniers full CW.

MODEL P25 SPECIFICATIONS

Pulse Characteristics

Polarity: Two separate channels, one positive-going, one negative-going, each with separately adjustable offset, amplitude, and rise/fall. Will withstand direct shorts to ground without damage.

Repetition Rate: 1 Hz to 50 MHz, in 4 ranges with continuously adjustable coarse and fine vernier adjustment. 100:1 adjustment on lowest 3 ranges. 50:1 on 50 MHz range.

Width: Less than 100 nanoseconds to 1 second in 4 ranges with continuous 100:1 adjustment in any range.

Delay: Adjustable from less than 10 nanoseconds to 1 second with respect to sync output in 4 ranges with continuous 100:1 vernier adjustment in any range.

Jitter: Rate, delay, and width jitter less than 0.1% + 50 picoseconds.

Amplitude with 50-Ohm Termination: 10, 5, and 1V ranges with continuous 10:1 adjustment in any range.

Amplitude into Open Circuit: 5 and 1V ranges, double in amplitude to produce amplitudes to 10V.

Offset: Positive channel baseline adjustable +1 to −6V with 50 ohm load, −12 to +12V into open circuit; negative channel baseline adjustable −1 to +6V with 50-ohm load, +2V to −12V into open circuit, independent of attenuator setting (disabled on 10V attenuator setting.) Either channel may be made into the complement of the other via offset, for any waveform up to 5V amplitude into 50 ohms.

Output Impedance: 50 ohms, constant for any amplitude vernier setting on 1 and 5V ranges; internal 50-ohm source disconnected on 10V range.

Rise/Fall Times: Adjustable from 5 nanoseconds to 0.5 second in 4 ranges with separate 100:1 vernier adjustments of rise and fall times for both output channels. Rise and fall times are linear to greater than 95% between 10 and 90% points for times greater than 30 nanoseconds.

Aberrations: Overshoot, preshoot, and ringing less than 5% of pulse amplitude.

Duty Cycle: Delay and repetition rate greater than 75% of period for rates to 10 MHz, decreasing to 50% at 50 MHz in all modes except constant duty cycle (see below).

Modes

Normal: Internal clock provides trigger for standard delay and width functions.

Constant Duty Cycle: Duty cycle of pulse set by width vernier as percent of pulse period and maintained essentially constant over entire pulse rate range. Duty cycle continuously adjustable from 5 to 95% of period with pulse rates to 1 MHz, decreasing to 50% duty cycle at 50 MHz.

Double Pulse: Provides two pulses for each generator cycle. Pulses separated by delay period. Maximum effective rate is 50 MHz (internal clock at 25 MHz).

Trigger: Manual or external trigger (0.7 Vp-p min., 35V max.) at trigger input generates one complete pulse cycle. Threshold adjustable ±5V with trigger level control. Trigger slope switch selects positive- or negative-going edge of external signal. Input impedance is 1 kilohm in parallel with 15 picofarads.

Gate: Manual or external signal at trigger input enables generator for duration of applied signal. Last cycle is completed even if gate is removed in mid-cycle.

Triggered Double Pulse: Same as triggered pulse except two pulses separated by delay period are initiated with each trigger command.

Pulse Amplifier: External waveform applied to input BNC connector is squared and applied directly to output amplifier. Offset, amplitude, and rise/fall controls may be independently adjusted as in normal mode. May be activated with manual trigger.

Trigger Light: Glows whenever internal clock of external trigger is providing adequate trigger to following circuits and sync output. Will blink at extremely slow trigger rates. In constant duty cycle mode, light goes out if pulsewidth settings are either too narrow or too wide for proper operation.

Auxiliary Outputs

Sync Output: Nominal 0 to +2.5V into open circuit (TLL compatible). Rise/fall time is less than 5 nanoseconds. Output impedance is 50 ohms. Square wave except in duty cycle mode where duty cycle is identical to main output and external modes where duty cycle is identical with external drive signal. Occurs in all modes of operation.

Clock Output: Nominal 0 to +2.5V into open circuit (TTL compatible). Rise/fall time is less than 5 nanoseconds. Output impedance is 50 ohms. Square wave in all modes, coherent with main output in normal and duty cycle modes, and during gate interval. Nonsynchronous free-running in trigger and pulse amplifier modes.

Environmental Characteristics

Power: Switch-selectable 100, 115, 200, or 230 Vac ±10%, 48 to 440 Hz, 75W max.

Operating Temperature: 0° to 50°C.

Physical Characteristics

Dimensions: 17 in. wide x 3-1/2 in. high x 13-1/2 in. deep (43.18 cm x 8.89 cm x 34.29 cm)

Weight: 15.5 pounds, net (7.1 kilograms).

NOTE: Except where otherwise noted, all specifications apply with 50 ohm resistive load, 5V output level, zero offset, amplitude verniers full CW.

Section 2
OPERATING INSTRUCTIONS

2-1. INTRODUCTION

As shown in figure 2-1 there is a high degree of commonality between the P24 and P25 pulse generators. Refer to the individual specification sheets for the detailed differences between the models.

An important design consideration for the SERIES 20 Pulse Generators was to maximize the ease with which the generators may be used with other equipments. Accordingly, all models are supplied with a full set of conditioning controls for any external input signal. Further, all of these controls are located on the front panel: There are no operating controls on the rear panel. The line-voltage selector switches on the rear panel permit the user to adjust to a wide range of line voltage conditions.

2-2. OPERATING NOTES

a. USE WITH OSCILLOSCOPES. - In general, an oscilloscope is needed to make meaningful tests with these high performance pulse generators. At least a 150-MHz scope, such as the Tektronix 454A, is desirable if meaningful measurements of test rise times and 50-MHz repetition rates are to be made. Quality of the pulse waveforms (i.e., rise time, overshoot and other aberrations) cannot be measured accurately with any scope except a sampling type. However, a rule of thumb may be used for estimating pulse quality when using a Tektronix 454A: If the pulse looks pretty good (less than 8 to 10 percent aberrations) then it will most likely meet specifications on a sample scope.

In using a scope to evaluate pulse quality, the biggest source of aberrations will be the connection between the generator and the scope. Best results will be realized if the generator BNC connector is terminated immediately in a 50-ohm load and the scope probe terminated directly in that load (via an adaptor). If a coaxial cable must be used, then it must have 50 ohms characteristic impedance and be terminated in a 50-ohm load at the scope terminals.

In general, this method will show certain aberrations on the scope because of less than perfect 50-ohm transmission line characteristics at each interface. BNC connectors are used in these instruments as a matter of convenience to the average user, not because of their high-quality transmission characteristics for pulse rise times of 3 to 5 nanoseconds. Actually, BNC connectors are marginal at 3 nanoseconds. (The GR hermophroditic connector should be used for rise times of 2 nanoseconds or less if waveform quality is of great interest to the user.)

In the use of pulse generators, it is axiomatic that the number of apparent problems in per-

formance and pulse quality is inversely proportional to the experience of the user. If problems are experienced in getting the generator to do what you expect it to do, much time and frustration can be saved by consulting a resident expert in pulse work (or the factory as a last resort). Some typical problems and insights are mentioned below:

(1) The Tektronix 454A has a 2.4-nanosecond rise time which, when combined with a true 3.5-nanosecond pulse rise time, exhibits an apparent 4.25-nanosecond rise time on the scope (21 percent error).

(2) The first 4 to 5 nanoseconds along the top (and bottom) of a pulse may exhibit some aberrations as a result of cable and interface imperfections. This thesis may be tested by adding another similar piece of cable in series with the first and observing a change in the nature and duration of the aberrations. (Note: one foot of 50-ohm coaxial cable approximates 1.5 nanosecond of propagation time.) Dramatic aberrations occur if anything other than 50-ohm cable is used.

(3) Any one of the controls, (REPETITION RATE, DELAY, WIDTH, or RISE/FALL) may be adjusted incompatibly with the others and thereby totally defeat getting an expected output from the generator. The RISE/FALL controls deserve particular attention because they also can defeat the output in any mode. Unfortunately, these phenomena are intrinsic to a versatile pulse generator.

(4) It may not be obvious to the inexperienced user that certain controls are disabled in certain operating modes. For example, the DUTY CYCLE mode disables both DELAY controls plus the WIDTH range switch. (Read the specification sheet carefully.)

(5) There is a built-in delay of approximately 4 nanoseconds between the positive and negative output pulses (positive lags negative). This occurs because there is one extra Schottky gate in the positive pulse path. An additional 32 inches of 50-ohm coaxial cable can be placed in series with the negative output to compensate for this delay, if desired.

(6) If a unit does not appear to meet some specification when in the 1-volt or 10-volt output ranges, it is probably because it is not specified in those ranges. Specifications for rise time and aberrations apply principally to the 5-volt range.

b. SELF TEST. All operating modes of the generator may be tested without the use of an external generator. The internal repetition rate oscillator (clock) is free running and provides an output to the "Clock Output" connector in all modes except GATE. To test the external TRIGGER, TRIGGER DOUBLE PULSE" and PULSE AMPLIFIER modes, connect a cable between the CLOCK OUTPUT and INPUT BNC connectors and proceed as though the internal clock were an external square wave generator. To test the GATE mode, depress the MANUAL pushbutton and adjust the trigger LEVEL control for a continuous stream of pulses.

c. INITIAL TURN-ON. - To assure that some kind of pulse is put out by the generator when first setting up an experiment, set the controls as follows:

Step 1. Set MODE to DUTY CYCLE.

Step 2. Set SLOPE switch at "-".

Step 3. Set REPETITION RATE, 1 to 50 MHz range, vernier at full CCW rotation.

Step 4. Set DELAY to 10 nsec to 1 μsec range, vernier at full CCW rotation.

Step 5. Set WIDTH, 10 nsec to 1 μsec, range, adjust vernier until green "Trigger" light is on.

Step 6. Set RISE/FALL TIME, 5 nsec to 500 nsec range, verniers at full CCW rotation (P25 only.)

Step 7. Set ATTENUATORS, 5-volt range, verniers at full CW rotation.

Step 8. Set OFFSET at OFF (both outputs).

These settings should provide an 800-kHz pulse train with at least a 5-percent duty cycle. The MODE may now be switched to NORMAL for conventional pulse generator operation.

d. COMPLEMENTARY PULSE OUTPUTS. Racal-Dana P24 and P25 generators are designed to provide complementary pulse trains at the two outputs via use of the OFFSET controls. Either positive or negative complements may be created with amplitude up to 5 volts. Offset is disabled in the 10-volt range.

In the DUTY CYCLE mode both output channels may be switched into instant complements of themselves (in any voltage range) by simply reversing the Trigger SLOPE switch or momentarily depressing the MANUAL switch.

2-3. CONTROLS AND INDICATORS

Functions of the front panel controls and indicators are described in table 2-1. The Index numbers in table 2-1 are keyed to figure 2-1.

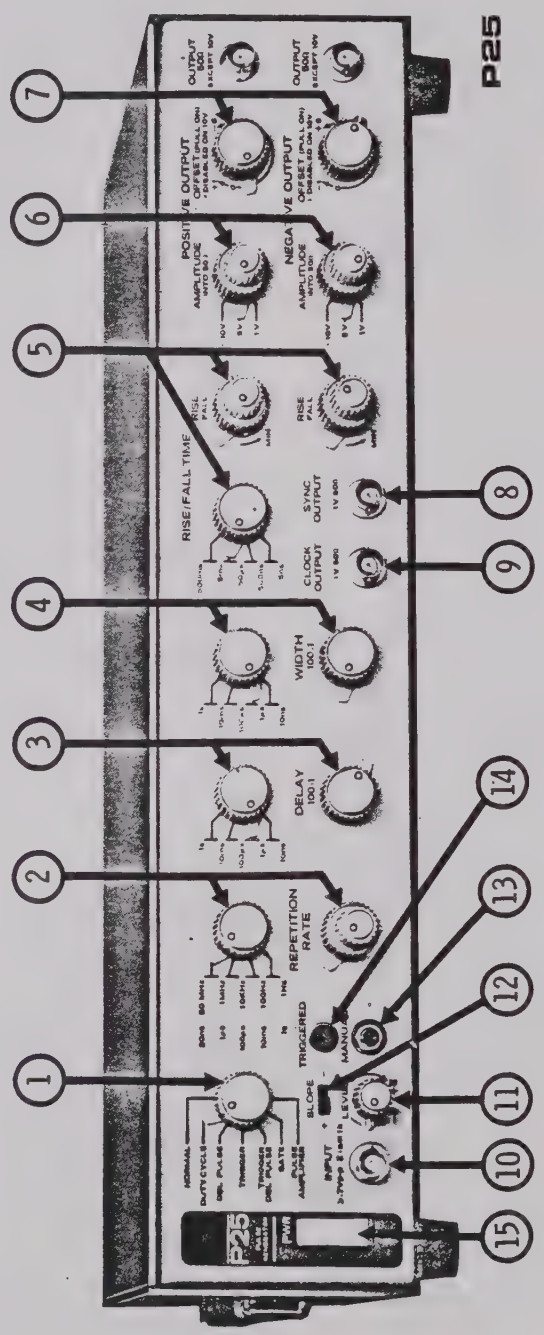

Figure 2-1. Front Panel Controls and Indicators

TABLE 2-1. FUNCTIONS OF FRONT PANEL CONTROLS AND INDICATORS

Index No.	Function	Index No.	Function
1	MODE CONTROL: A seven-position rotary switch permits the user to establish one of the following operating modes: NORMAL - Provides for a continuous train of pulses, fully controllable via REPETITION RATE, DELAY, WIDTH, etc. DUTY CYCLE - In this mode, the pulse duty cycle is caused to remain nominally constant as repetition rate varies. (Subject to the minimum pulse width limitation of 10 nsec.) The use of this mode simplifies setup in many applications because controls for DELAY range, DELAY vernier, and WIDTH range are all rendered inoperable. The WIDTH vernier is used to set the desired duty cycle. DBL PULSE: Two pulses will occur for each period of the repetition rate generator (but they will be limited to the 25-MHz rate or 50-MHz effective pulse rate). The leading pulse will be initiated nominally coincident with the positive-going SYNC output. The second pulse will be initiated at the expiration of the period established by the DELAY controls.		TRIGGER: A single-output pulse will occur in response to a voltage level change at the INPUT connector or in response to the MANUAL pushbutton. DELAY and WIDTH controls are fully operable in this and other modes unless otherwise noted. (Note: The internal clock continues to operate in all external input modes except GATE and its frequency is controlled by the REPETITION RATE controls. The clock signal is available at the CLOCK OUTPUT BNC connector.) TRIGGER DBL PULSE: Two output pulses, separated in time by the delay period, will occur in response to a voltage level change at the INPUT connector, or in response to the MANUAL pushbutton. (Internal clock runs continuously). GATE: A series of output pulses gated "on" in response to a voltage level at the INPUT connector, or in response to the MANUAL pushbutton will occur. The gating is synchronous, the first pulse starting immediately on command, and the final pulse completing a full period,

Table 2-1. Functions of Front Panel Controls and Indicators (Continued)

Index No.	Function	Index No.	Function
	even if the gating signal should go "off" during a pulse period. PULSE AMPLIFIER: A signal at the INPUT connector is squared and delivered to the output amplifier for shaping as desired. The DELAY and WIDTH controls are not functional in this mode. (Internal Clock runs continuously.)		DELAY controls are functional in all modes except DUTY CYCLE and PULSE AMPLIFIER.
2	REPETITION RATE CONTROL A four-position range selector, plus a vernier with >100:1 adjustment. Combined range of adjustment is from less than 1 Hz to in excess of 50 MHz with overlap between ranges.	4	WIDTH CONTROL A four-position range selector, plus a vernier with 100:1 adjustment. Combined range of adjustment is from less than 10 nsec to in excess of 1 sec with overlap between ranges. There is, however, a worst-case limitation that width may not be adjustable past 75 percent of the repetition rate period (specified to 10 MHz and decreasing to 50 percent at 50 MHz). Typically, a wider range of adjustment is attainable, up to ≈ 95 percent of repetition rate period. In DUTY CYCLE mode, only the WIDTH vernier is functional (width range is not used). The range of vernier adjustment in this case is 5 percent to 95 percent duty cycle, decreasing to 50 percent at 50 MHz. (Note: Trigger light will go out if vernier setting is improper.)
3	DELAY CONTROL A four-position range selector, plus a vernier with >100:1 adjustment. Combined range of adjustment is from less than 10 nsec to in excess of 1 sec with overlap between ranges. There is, however, a worst-case limitation that width may not be adjusted beyond 75% of the repetition rate period at 10 MHz, decreasing to 50% at 50 MHz. Typically, a wider range of adjustment is attainable up to ≈ 95 percent of repetition rate period.	5	RISE/FALL CONTROL A four-position range selector, plus verniers with >100:1 adjustment. There are separate verniers

Table 2-1. Functions of Front Panel Controls and Indicators (Continued)

Index No.	Function	Index No.	Function
	for rise time and for fall time. The Model P25 is equipped to permit independent adjustments of each output channel. The RISE/FALL TIME controls are functional in all modes of operation.		has a need for very low amplitude pulses (<200 mV) in a wideband application, it is recommended that an external attenuator be considered.
6	OUTPUT AMPLITUDE A three-position voltage range selector, plus a vernier. The selected range (10V, 5V, or 1V) defines the maximum obtainable voltage across a 50-ohm load. The 10V range must be terminated by a 50-ohm load. The other two ranges, because they utilize an internal 50-ohm back termination, are less demanding with regard to output load. For many applications, where a true 50-ohm environment is not essential, and where minor cable reflections are tolerable, satisfactory operation into a high impedance load is possible. Into an open circuit, the output voltage on the 5V and 1V ranges will be twice the indicated value, or 10 volts and 2 volts, but this is not true of the 10V range. Care should be exercised when using the AMPLITUDE vernier near its minimum adjustment. When amplitude is reduced below 1/5 of maximum, the nature of the bridged-T circuit of the vernier is such that pulse overshoot may be accentuated. If the user	7	OUTPUT OFFSET (and Complementary Pulses) Offset of the pulse baseline is obtained by pulling on the CONTROL knob and then rotating it until the desired magnitude is obtained. For positive-going pulse outputs, the offset is adjustable between +1 and -6 volts. For negative-going pulse outputs, the range is -1 to +6 volts. The offset magnitude, once adjusted, is independent of the output amplitude control settings (except for the 10V range setting, where offset is completely disabled.) Either output may be made into the complement of the other via OFFSET.
		8	SYNC OUTPUT This is a rectangular wave at TTL compatible level voltages (≈ 0 to +3V into a standard TTL load). Source impedance is 50 ohms. The signal at SYNC OUTPUT is steered in accordance with the selected operating mode. In NORMAL, TRIGGER, and GATE modes, the positive-going edge of the sync waveform precedes the leading edge of each main output pulse by the adjustable delay period.

Table 2-1. Functions of Front Panel Controls and Indicators (Continued)

Index No.	Function	Index No.	Function
	For DUTY CYCLE, DBL PULSE, TRIGGER DBL PULSE, and PULSE AMPLIFIER modes, the positive-going edge of the sync waveform is nominally coincident with the leading edge of the main pulse and DELAY controls do not affect this relationship.		it is recommended that a source impedance of 50 ohms be employed. A word of caution is in order relative to the interaction of signals when the DUTY CYCLE mode is selected. Any signal present at the INPUT will modulate the pulse duty cycle, due to sharing of trigger circuit elements. If desired, this can provide a remote control of duty cycle.
9	CLOCK OUTPUT This is a nominal squarewave at the frequency of the repetition rate generator. The voltage levels are TTL compatible (≈ 0 to +3V into a standard TTL load). Source impedance is 50 ohms. Unlike the SYNC, the clock waveform does not have a specified time relationship to the main output pulse. The clock is available as a free-running output for all modes except GATE, where it is caused to lock up in accordance with an external level.	11	LEVEL CONTROL Adjusts the threshold level of the external input. The threshold is adjustable to occur anywhere in the region between +5 and -5 volts. Under certain conditions where fast rise/fall time pulses are utilized as an input, the LEVEL control can be adjusted for not only the usual level sensitivity, but it can also be adjusted for an effect best described as edge triggering. In other words, a type of dv/dt sensitivity can be obtained which will cause the input pulse to be effectively differentiated. Should this occur, the output of the Schmitt trigger will consist of narrow spikes whose width is unrelated to the true width of the actual input pulse. When in TRIGGER modes, the effect will be that triggering can occur on the wrong edge of the input
10	INPUT (for Trigger, Gate, or Pulse Amplifier) Accepts an external voltage level 0.7V p-p. The level may be ac, dc, or pulsed. A threshold level, at which a Schmitt Trigger generates a change of state, is adjustable between the limits of ±5 volts by means of the LEVEL control. The input impedance is 1K ohm at dc, shunted by ≈15 pF. Should the input waveform have frequency components above a few MHz,		

Table 2-1. Functions of Front Panel Controls and Indicators (Continued)

Index No.	Function	Index No.	Function
	pulse. In the gate and PULSE AMPLIFIER modes, the effect will be one of the incorrect gate time or pulse time. In either case, simply use additional care in adjusting the LEVEL control to reject this "edge triggered" condition.	13	MANUAL PUSHBUTTON Pushing or releasing this panel control will simulate a crossing of the threshold of an external input. The sense of the control (that is, whether it activates the generator upon pushing or upon releasing) is a function of the combined settings of SLOPE and LEVEL controls. The pushbutton will activate upon release provided that the SLOPE switch and LEVEL control are both set the same polarity (i. e., SLOPE at "+" and LEVEL at "+5"). By reversing either SLOPE or LEVEL, but not both, activiation will occur upon pushing.
12	SLOPE SWITCH Determines whether a positive-going or negative-going INPUT level will cause the desired instument response. For triggering on the positive-going input, or enabling the gate or pulse amplifier on the more positive portion of the input, place the SLOPE switch at "+"; for the converse, place the SLOPE switch at "-". When operating in the DUTY CYCLE mode, the position of the SLOPE switch determines the direction of rotation of the WIDTH vernier for increasing pulse width. For width increasing in the CW direction, the SLOPE switch should be at "-". As an adjunct to this relationship, an "instant complement" of the pulse waveform can be formed by simply reversing the position of the SLOPE switch (or, momentarily, by depressing the MANUAL pushbutton).	14	TRIGGERED INDICATOR Glows whenever internal or external levels are of sufficient amplitude to operate the generator circuits. A nominal 1-second time constant in the lamp circuit prevents blinking, except for operation at extremely low repetition rates.
		15	AC POWER SWITCH & INDICATOR- Switch glows when power is turned on.

Table 2-1. Functions of Front Panel Controls and Indicators (Continued)

Index No.	Function	Index No.	Function
16	AC POWER SELECTION (Rear Panel) Four distinct levels of a-c input voltage may be employed to power SERIES 20 instruments. A selector switch, at the rear panel, allows a first-level selection of either 115V or 230V nominal value. A second-level selection labeled FINE ADJ should be placed at normal if line voltage is within ±10 percent of		nominal. A low-line position permits operation at 100 or 200V ±10 percent. CAUTION Be sure to check the rating of the installed fuse before placing the instrument into service or after changing voltage settings: 100/115V - 3/4A Slo-Blo 200/230V - 3/8A Slo-Blo

Section 3
CIRCUIT DESCRIPTION

3-1. INTRODUCTION

The simplified block diagram, figure 3-1, shows the major functional blocks and signal flow of the P24 and P25 pulse generators. A greater level of detail is shown in section 5 in the block diagrams for each mode and in the overall schematic diagram in section 7.

Each basic circuit group in the detailed diagrams and schematics (sections 5 and 7) has been labeled according to function; i. e., CLOCK, POSITIVE OUTPUT AMPLIFIER, etc. Further, each group has been given a three-digit number unique to that function; i. e., CLOCK (100-199), POSITIVE OUTPUT AMPLIFIER (500-599), etc. Thus, Q101 is the transistor Q1 in the clock circuit. Zones on the printed circuit board are labeled with both name and number; i. e., CLOCK 1XX, and individual components are labeled with the last two digits only.

3-2. POWER SUPPLY (Ref. 9XX)

a. UNREGULATED DC AND RECTIFIERS. - Three unregulated d-c voltages, nominally +28, -28, and +10 volts, are generated to supply voltage regulator circuits. In turn, constant d-c voltages are utilized by all instrument circuits. Two center-tapped secondary transformer windings and three sets of full-wave rectifiers, plus filter capacitors, are used.

b. REGULATED SUPPLIES. - There are three regulated d-c supplies: +20, -20, and +5 volts. The +20-volt supply, adjustable by R909, is used as a reference for the complementary, tracking -20-volt supply. IC901 and IC902 are high-gain regulating amplifiers. Q903 and Q906 provide overcurrent protection in the event of an overload or short circuit.

The +5-volt regulated supply is nonadjustable, and is independent of the +20 and -20-volt supplies. It utilizes a single-package integrated circuit, IC903. Self-protecting thermal shutdown is inherent in the circuit.

The actual currents drawn from the various supplies are dependent upon load and control settings, but nominal maximums are 1 ampere for each of the 20-volt supplies, and one-half ampere for the +5-volt supply.

3-3. CLOCK (Ref. 1XX)

The clock, or repetition rate generator, produces a triangular shaped waveform. Controllable currents, caused to alternately charge and discharge a selectable timing capacitor, determine the clock frequency.

a. CURRENT CONTROL. - The front panel REP RATE VERNIER control, R2, controls the amount of collector current flowing at Q101.

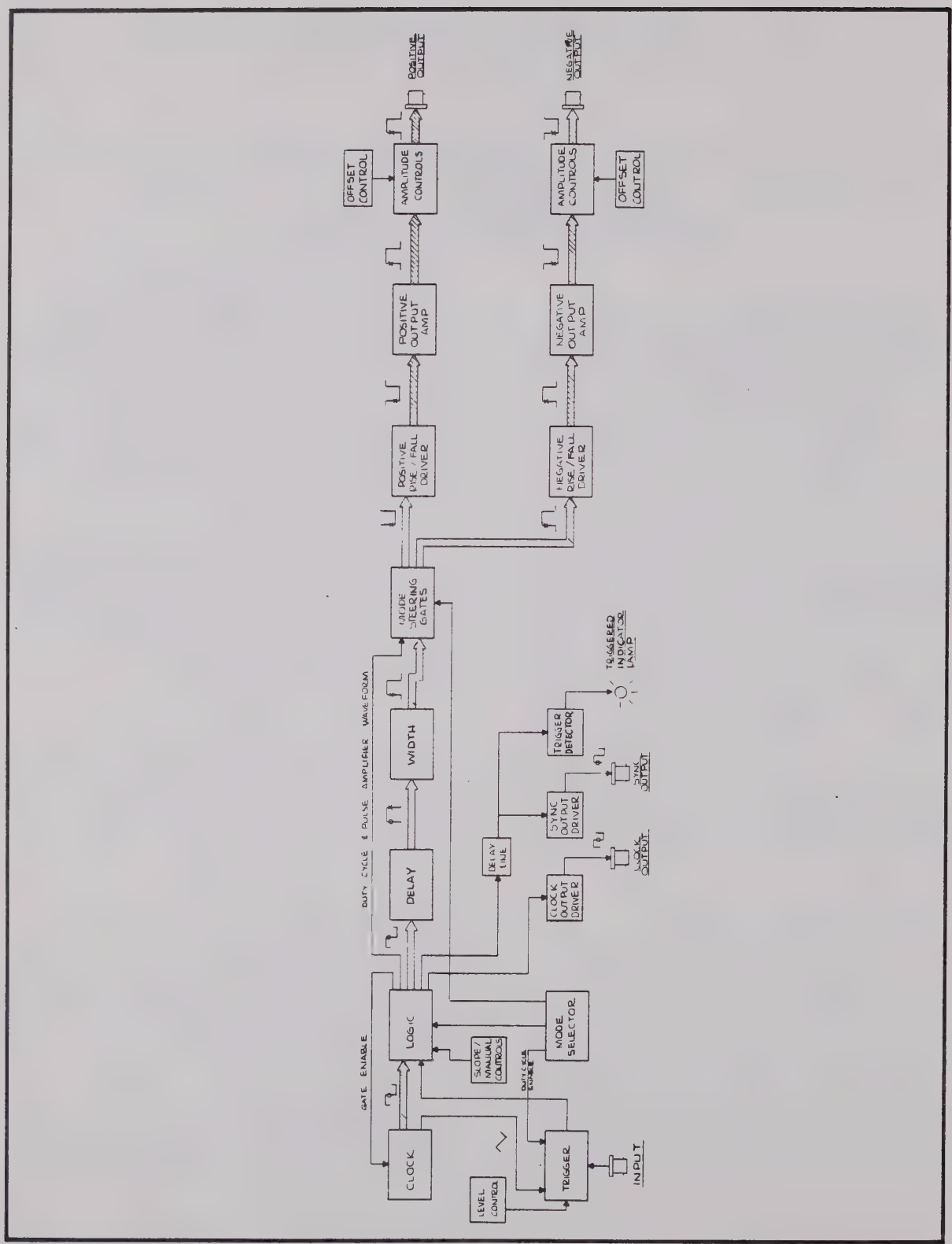

Figure 3-1. Simplified Block Diagram – P24 and P25 Pulse Generators

A tracking amplifier, IC101, causes a 2x current flow at Q104 collector. Current switches Q102 and Q103 direct the net flow of current into timing capacitor node TP101, causing alternate charging and disharging of the selected timing capacitance.

b. TRIANGULAR WAVEFORM. - The triangular waveform, at Q110 emitter, is directly utilized (in the DUTY CYCLE mode only) at the trigger circuits (Ref. 4XX); otherwise, it is merely an internal timing waveform not directly used elsewhere within the instrument.

c. SQUARE (DIGITAL) WAVEFORM. - A pulsed waveform is developed which principally controls the triangular waveform and, in addition, sets and resets current mode latch Q107, Q108, and Q112. The output (collector) of Q108, which has a signal level of 2 volts p-p, is buffered by emitter follower Q109. A 50-ohm transmission line couples the squarewave signal to the logic circuits (Ref. 8XX).

3-4. TRIGGER. (Ref. 4XX)

An external trigger signal, applied to INPUT connector J2, is summed at TP 401 with a controllable d-c current caused to flow through Q401. Current mode Schmitt Trigger Q405, Q404, and Q407, delivers a pulse waveform whenever the external signal plus the summed d-c control current reverse polarity. When operating in the DUTY CYCLE mode, a similar action is caused to occur once per clock cycle. The level at which the pulsed waveform is caused to change state determines the duty cycle of the pulse.

3-5. LOGIC (Ref. 8XX)

The Logic section accepts inputs from either the clock (to Q801) or from the trigger section (to Q806). These inputs are first converted to standard TTL levels, and are then steered in accordance with the selected operating mode of the instrument. Outputs from the Logic section are routed to the following:

- Delay section (all modes except DUTY CYCLE and PULSE AMPLIFIER)
- Clock section (to turn on the Clock in the GATE mode)
- Rise/Fall section (DUTY CYCLE and PULSE AMPLIFIER modes)
- Clock Output and Sync Output driver circuits.

A fixed-time delay circuit is inserted to provide the proper calibrated time delay of the SYNC OUTPUT relative to the main OUTPUT.

3-6. DELAY (Ref. 2XX)

The DELAY generator is a one-shot circuit, triggered from the Logic Section. A controllable current, via Q201, charges a selectable timing capacitance at node TP201. When the timing capacitance charges to a nominal 2.2-volt level, the circuit is caused to reset to its quiescent level, awaiting a subsequent retrigger.

3-7. WIDTH (Ref. 3XX)

The WIDTH circuit description is identical to that of the DELAY (paragraph 3.6) except that the trigger source for WIDTH is the

DELAY generator, whose signal pulse is processed via IC302. The output of IC302 (pin 6) is a single differentiated pulse, or, in the DBL PULSE mode, two pulses per clock cycle.

3-8. RISE/FALL (Variable, Ref. 5XX and 6XX)

There are two RISE/FALL sections and each accepts a TTL level pulse input. The TTL pulse is level-shifted, then shaped as necessary to develop the required pulse waveform for amplification at the output amplifier.

Independently controllable currents, via Q501 and Q508, are caused to charge and discharge a selectable timing capacitance. The resultant charge/discharge rates determine the rise and fall times of the final pulse.

Pulse amplitude is established by clamp transistors Q504, Q505, Q510, and Q512. Emitter follower amplifiers Q513 and Q514 provide a low-impedance drive source to the final output amplifier.

The other Rise/Fall Section (Ref. 6XX) develops the required pulse for the negative main output. Its description is identical, except for 6XX reference designation instead of 5XX.

3-9. (Deleted)

3-10. OUTPUT AMPLIFIER (Ref. 5XX and 6XX)

The Output Ampifier accepts a bipolar, pulse waveform from its associated Rise/Fall circuit. The pulse waveform is level shifted via common base amplifier Q552, then is converted to a nominal 0 to 200 mA high-level current pulse by Q559 and Q560. The resultant current is power amplified, which involves coupling via common-base amplifiers Q561 and Q562 to the output attenuator and load circuit.

3-11. OFFSET (Ref. 7XX)

Offset is generated by an adjustable d-c current which flows into the output circuit impedance and through its ground return. The resultant voltage offset at the instrument terminals is the product of this adjustable current and the net output circuit resistance. Inductors L701 through L705, together with associated damping resistors, serve to isolate the 50-ohm matched output impedance from the undesirable impedance characteristics of current source transistors Q705 and Q706.

3-12. ATTENUATOR ASSEMBLY (Ref. 0XX)

Output amplitude control is obtained by a combination of three methods:

- A 50-ohm continuously variable constant impedance bridged-T attenuator.
- A fixed, switchable, 14-dB attenuator (used on the 1V range).
- Switch disconnect of the 50-ohm internal "back termination" at the output amplifier. This provides up to 10 volts across an external 50-ohm load, although at the expense of waveform quality, rise/fall times, and loss of offset capabilities. These disadvantages are practical limitations on power and voltage of the output amplifier, plus unavoidable impedance discontinuities at the amplifier output terminals.

Section 4
CALIBRATION AND PERFORMANCE TESTS

4-1. INTRODUCTION

This section contains the list of necessary equipment and the detailed procedures for checking your SERIES 20 pulse generator for proper operation and/or calibration of all elements of the instrument.

4-2. SUGGESTED RECEIVING INSPECTION TESTS

Just prior to shipment, the generator was processed through an automated test facility to verify calibration and operation. The following procedure is recommended for customers who have not developed their own formal acceptance test procedure.

a. EQUIPMENT REQUIRED.

- Oscilloscope (150 MHz desired, 50 MHz or greater required)
- 50-ohm termination (may be built into scope)
- 50-ohm BNC cables, 2 each

b. PROCEDURE.

Step 1. Upon unpacking the generator, check the position of rear panel power selector switches and fuse size if other than 115-volt line power is to be used. When shipped, the power selector switches were set for normal 115-volt operation and a 3/4-amp fuse was installed for 115-volt use.

NOTE

Refer to Section 2 of this manual for location of all controls.

Step 2. Apply power and note illumination of lamp in power switch.

Step 3. Attach (scope) to OUTPUT connector(s), using 50-ohm termination(s) at the face of the instrument under test. Attach SYNC OUTPUT to scope TRIG INPUT connector.

Step 4. Set generator controls as follows:

MODE SWITCH:	Normal
REP RATE:	10K to 1-MHz; vernier: full CW
DELAY:	10-nsec to 1-μsec; vernier: full CCW
WIDTH:	10-nsec to 1-μsec; vernier: full CCW
RISE/FALL:	5-nsec to 500-nsec; vernier(s); full CCW (P25 only)
AMPLITUDE:	5V verniers; full CW
OFFSET SW:	Off (pushed in, both channels)

Step 5. Observe presence of pulse train(s) on scope and also observe that "triggered"

lamp is on. Refer to paragraph 2-2 of this manual for comments on observed waveform quality and rise time.

Step 6. Vary, one by one, verniers for REP RATE, DELAY, WIDTH, and AMPLITUDE and observe appropriate response on scope display.

Step 7. Pull OFFSET switches ON, rotate vernier(s) and observe vertical displacement of waveforms on scope display.

Step 8. Reset all controls as in Step 4.

Step 9. Turn MODE switch to DUTY CYCLE. Rotate WIDTH vernier to achieve variable waveform duty cycle. Note: Trigger light is on whenever waveforms are present.) Set DUTY CYCLE at approximately 50 percent.

Step 10. Rotate RISE and FALL verniers and observe change in rise and fall times of pulses (P25 only).

Step 11. Turn AMPLITUDE switch(es) to 10V and 1V positions. Observe appropriate amplitude change(s) on scope.

Step 12. Turn MODE switch to DBL PULSE; rotate DELAY vernier to achieve double pulse display.

Step 13. Turn MODE switch to TRIGGER. Attach a cable between CLOCK OUTPUT and trigger INPUT connectors. (This allows the generator clock to act as a source of external trigger signals and confirms that the CLOCK OUTPUT is operating properly. Rotate trigger LEVEL control until pulses appear on scope display.

Step 14. Turn MODE switch to TRIGGER DBL PULSE, and rotate DELAY vernier to obtain double pulses on scope display.

Step 15. Remove cable connecting CLOCK OUTPUT and Trigger INPUT. Turn MODE switch to GATE. Triggered lamp should be off at one end of Trigger LEVEL vernier and on at the other. A pulse train should be present when lamp is on.

Step 16. To complete the tests, turn MODE switch to PULSE AMPLIFIER. Observe change of d-c levels on scope whenever MANUAL pushbutton is operated or SLOPE slide switch is reversed.

4-3. CALIBRATION TEST PROCEDURES

a. TEST EQUIPMENT LIST. - The test equipment listed in table 4-1 is required to complete the calibration test procedure. The suggested model or equivalent should be used. Figure 4-1 details the adjustment and test point locations.

b. PROCEDURE. - Table 4-2 provides the recommended sequence and methods for performing the pulse generator calibration test.

TABLE 4-1. REQUIRED TEST EQUIPMENT

Test Equipment	Suggested Model
Digital Voltmeter 4-1/2 digits with 100% overrange	Racal-Dana 4002A
Counter 100 MHz, Universal Timer/Counter	Racal-Dana 9515
Oscilloscope 150 MHz min	HP 1710A or Tektronix 454A (Caution--The 454A exhibits apparent baseline shift with duty cycle variation because of differential heating effects in the vertical amplifier.) This effect may be minimized or eliminated by a qualified scope technician at the expense of certain other deflection characteristics.
Sampling Oscilloscope 1-GHz Bandwidth	Tektronix 561B with S-3A Sampling Head
50-Ohm Terminator	Tektronix 011-0049-01
Function Generator	Racal-Dana F31

TABLE 4-2. CALIBRATION TEST PROCEDURE

Step	Calibration	Control Setting	Test Equipment	Procedure	Equip Spec.
1.0	POWER SUPPLY	MODE: NORMAL REPETITION RATE: 100 Hz to 10 kHz	DVM-(DC)	1. Connect DVM to TP901. 2. Adjust R909 for +20.00 ±0.05V. 3. Measure: -20.0 ±0.1V at TP902 +5.0 ±0.25V at TP903	None
2.0	CLOCK				
2.1	Triangle AC	REPETITION RATE vernier: mid range	DVM (AC)	1. Connect DVM to TP101. 2. Adjust R120 for 0.416 ±0.002 Vac.	
2.2	Triangle DC		DVM (DC)	Adjust R122 for 3.75 ±0.01 Vdc.	

Table 4-2. Calibration Test Procedures (Continued)

Step	Calibration	Control Setting	Test Equipment	Procedure	Equip. Spec.
2.3	Clock Symmetry	REPETITION RATE: 10 kHz to 1 MHz REPETITION RATE vernier: CCW	Counter (Time interval channel A negative, channel B positive.) Counter (Time interval channel A positive, channel B negative.)	1. Connect counter to CLOCK OUTPUT. 2. Adjust R158 for time interval of 65 ±10 μs. 3. Adjust R103 for time interval of 65 ±10 μs.	
2.4	Frequency Calibration	REPETITION RATE vernier: CW	Counter (frequency)	Adjust R143 for 1.3 ±0.05 MHz.	1.0 MHz MIN
2.5	High Frequency	REPETITION RATE: 1 MHz to 50 MHz	Counter	Adjust R151 for 51 ±1 MHz	50 MHz MIN
3.0	DUTY CYCLE				
3.1	Range Adjust	Mode: DUTY CYCLE REPETITION RATE: 10 kHz to 1 MHz REPETITION RATE vernier: mid range		Adjust R411 for the TRIGGERED lamp to extinguish the same distance from the CW end of the WIDTH vernier as the CCW end.	
4.0	GATE				
4.1	First Cycle Adjust	Mode: GATE TRIGGER LEVEL: Center	Scope (DC)	1. Connect scope to TP102. 2. Connect on external signal source of >2 Vpp, 5 kHz to INPUT BNC. 3. Adjust R126 for the negative peak of the first cycle to be level with succeeding peaks. 4. Remove external source.	
5.0	DELAY				
5.1	Trigger Point Adjust	Mode: Normal REPETITION RATE: 100 Hz to 10 kHz DELAY: 100 μs to 10 ms DELAY vernier: CCW	Scope (AC)	1. Connect scope to TP203. 2. Adjust C211 for maximum capacity. 3. Adjust R221 for a trigger point of 100 mV (see figure below) 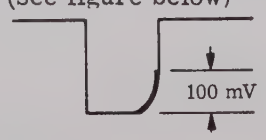	

Table 4-2. Calibration Test Procedure (Continued)

Step	Calibration	Control Setting	Test Equipment	Procedure	Equip. Spec.
5.1 (Cont)			Counter (Time interval channel A positive, channel B negative.)	4. Connect counter to TP202. 5. Adjust R201 for a time interval of 70 ±10 μs.	100 μs MAX
5.2	Delay Calibration	REPETITION RATE: 1 Hz to 100 Hz DELAY vernier: CW	Counter (Time interval channel A positive, channel B negative.)	1. Connect counter to TP202. 2. Adjust R208 for time interval of 13.0 ±1 ms.	10 ms MIN
		REPETITION RATE: 100 Hz to 10 kHz DELAY: 10 ns to 1 μs		3. Adjust C202 for 1.3 ±0.1 μs.	1 μs MIN
6.0	WIDTH				
6.1	Trigger Point Adjust	DELAY vernier: CCW WIDTH: 100 μs to 10 ms WIDTH vernier: CCW	Scope (AC)	1. Connect scope to TP303. 2. Adjust R326 for a trigger point of 100 mV. (See figure below) 	
			Counter (Time interval channel A positive, channel B negative.)	3. Connect counter to TP302. 4. Adjust R301 for a time interval of 70 ±10 μs.	100 μs MAX
6.2	WIDTH Calibration	REPETITION RATE: 1 Hz to 100 Hz WIDTH vernier: CW	Counter (Time interval channel A positive, channel B negative.)	1. Connect counter to TP302. 2. Adjust R308 for a time interval at 13.0 ±1 ms	10 ms MIN
		REPETITION RATE: 100 Hz to 10 kHz WIDTH: 10 ns to 1 μs		3. Adjust C302 for 1.3 ±0.1 μs	1 μs MIN

Table 4-2. Calibration Test Procedure (Continued)

Step	Calibration	Control Setting	Test Equipment	Procedure	Equip. Spec.
7.0	RISE-FALL				
7.1	Level Adjustments	Mode: pulse Amplifier Level: +5 Slope: - Slope: +	DVM (DC)	1. Connect DVM to TP501. 2. Adjust R530 for +1.75 ±0.05 Vdc. 3. Adjust R535 for -1.75 ±0.05 Vdc.	
				4. Connect DVM to TP601. 5. Adjust R630 for +1.75 ±0.05 Vdc.	
		Slope: -		6. Adjust R635 for -1.75 ±0.05 Vdc.	
7.2	Start Up Adjust	Mode: DUTY CYCLE REPETITION RATE: 10 K to 1 MHz RISE/FALL: 5 ns to 500 ns RISE/FALL verniers: CCW	Scope (DC)	1. Connect scope to TP501; scope sync to CLOCK. 2. Adjust WIDTH vernier for a nominal squarewave. 3. Set scope to external trigger, slope negative, 100 ns/cm. 4. Adjust REPETITION RATE vernier for the rise time to be at the center vertical graduation on the scope.	
		POS FALL TIME vernier: CW		5. Adjust R524 such that the start (≈5% amplitude) up the ramp is delayed by ≈100 ns. (NOTE: the 100 ns criterion is only a guide. The main objective is to obtain a problem free waveform with a small delay.)	
		Slope: + POS RISE TIME vernier: CW		6. Adjust R521 so that the start down the ramp is delayed by ≈100 ns.	
		POS FALL TIME vernier: CCW		7. Connect scope to TP601.	
		NEG RISE TIME vernier: CW		8. Adjust R624 so that the start up the ramp is delayed by ≈100 ns.	
		NEG FALL TIME vernier: CW NEG RISE TIME vernier: CCW		9. Adjust R621 so that the start down the ramp is delayed by ≈100 ns.	

Table 4-2. Calibration Test Procedure (Continued)

Step	Calibration	Control Setting	Test Equipment	Procedure	Equip. Spec.
8.0	OUTPUT AMPLIFIER				
8.1	Baseline Adjust	Mode: PULSE AMPLIFIER POS and NEG AMPLITUDE: 10V POS and NEG verniers: CW Level: +5 Slope: -	DVM (DC)	1. Connect DVM (unterminated) to POSITIVE OUTPUT. 2. Adjust R566 for +0.02 ±0.01 Vdc. 3. Connect DVM to NEGATIVE OUTPUT. 4. Adjust R666 for -0.02 ±0.01 Vdc.	
8.2	OFFSET and AMPLITUDE Adjust	NEG AMPLITUDE: 5V NEG OFFSET: CCW, ON (pulled out)	DVM (DC)	1. Connect DVM to NEGATIVE OUTPUT with a 50 ohm ±2% feedthrough termination.	
				2. Adjust R764 for +6.2 ±0.1 Vdc.	+6V MIN
		NEG OFFSET: CW		3. Adjust R765 for -1.2 ±0.1 Vdc.	-1V MIN
		NEG OFFSET: OFF (pushed in) Slope: +		4. Measure -5.2 ±0.2 Vdc.	-5V MIN
				5. If required, adjust voltage by selecting R672, R675.	
		POS AMPLITUDE: 5V		6. Connect DVM to POSITIVE OUTPUT with 50 ohm ±2% feedthrough termination.	
				7. Measure +5.2 ±0.2 Vdc.	+5V MIN
				8. If required, adjust voltages by selecting R572, R575.	
		POS OFFSET: CCW, ON (pulled out) Slope: -		9. Adjust R715 for -6.2 ±0.1 Vdc.	-6V MIN
		POS OFFSET: CW		10. Adjust R714 for +1.2 ±0.1 Vdc.	+1V MIN
8.3	Aberrations	MODE: Normal REPETITION RATE: 1 MHz to 50 MHz POS OFFSET: OFF (pushed in) WIDTH: 10 ns to 1 μs	Sampling Oscilloscope	1. Connect sampling oscilloscope to POSITIVE OUTPUT with 50 ohm ±2% feedthrough termination. 2. Adjust WIDTH vernier for a pulse presentation of ≈40 ns wide.	

Table 4-2. Calibration Test Procedure (Continued)

Step	Calibration	Control Setting	Test Equipment	Procedure	Equip. Spec.
8.3 (Cont)				3. Verify that the output pulse exhibits < 5% overshoot, ringing, and other aberrations while maintaining a rise time <5 ns. If required, select resistors and capacitors R554 and C578.	
				4. Repeat step 8.3 for NEGATIVE OUTPUT.	
9.0	Minimum Pulse	Mode: NORMAL WIDTH vernier	Sampling Scope	1. Connect sampling scope to POSITIVE OUTPUT with 50 ohm ±2% feedthrough termination.	
				2. Adjust C309 for a pulse width of 8 ±2 ns.	10 ns MAX
		Mode: DOUBLE PULSE		3. Adjust DELAY VERNIER to obtain two pulses.	
				4. Adjust C315 to obtain equal pulse widths.	

NOTES

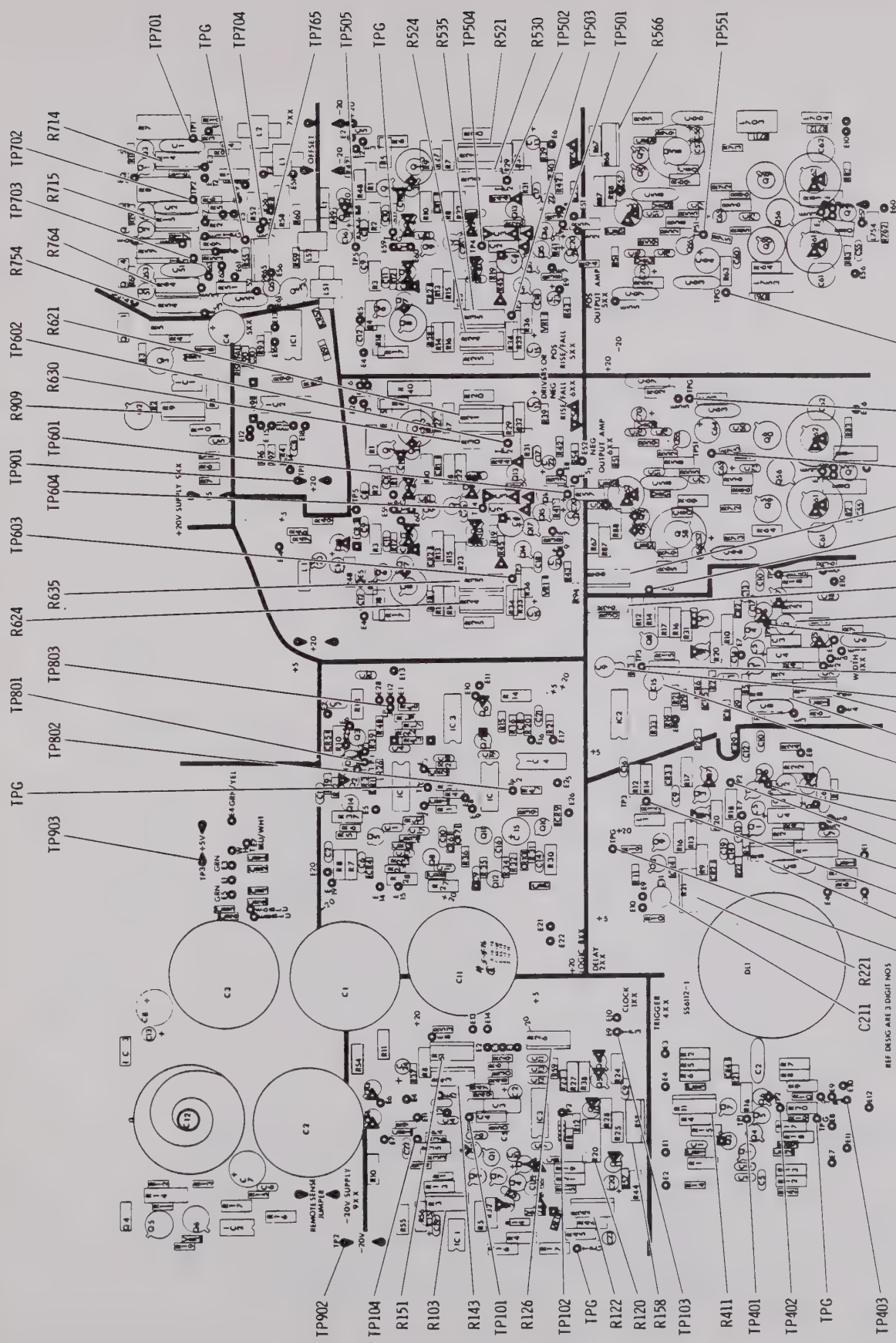

Figure 4-1. Adjustment and Test Point Location Diagram

Section 5
MAINTENANCE

5-1. INTRODUCTION

This section of your SERIES 20 manual will aid in isolating a malfunction to a particular section of the instrument. The schematic and circuit description section should therefore be reviewed for general design and operation fundamentals before attempting repair. Signal and d-c voltage levels are shown on the schematic diagrams in section 7. Test point and adjustment point locations are shown in section 4, figure 4-1.

5-2. FAULT ISOLATION

The signal flow within the instrument is mainly serial; i.e. the signal is cascaded from section to section, which eases the problem of fault isolation to a section. Each mode of operation, however, has a slightly different signal path. Signal flow diagrams for each of the seven modes are shown in figures 5-1 through 5-7. The signal flow diagrams show the signal flow to the mode steering gates. An additional diagram, figure 5-8 is used to show the output amplifier section which is the same for all modes. All modes of operation, except the GATE mode, can be tested fully without an external signal source. When testing the TRIGGER, TRIGGER DBL PULSE, or PULSE AMPLIFIER mode, connect a 50-ohm coaxial cable from the CLOCK OUTPUT to the INPUT. The clock is a free-running oscillator in these modes and can be used as an independent signal source. To exercise the GATE mode, disconnect the cable from the INPUT and press the MANUAL pushbutton.

5-3. LOGIC SECTION

A simplified description of the LOGIC section is shown in figure 5-9. This diagram can be useful in tracing the signal flow through the logic. The logic section uses TTL positive NAND gates to steer the signals to the proper outputs. Simplification of the LOGIC section has been made by replacing the gating arrangements with equivalent SPST or SPDT switches. An example of this simplification is as follows:

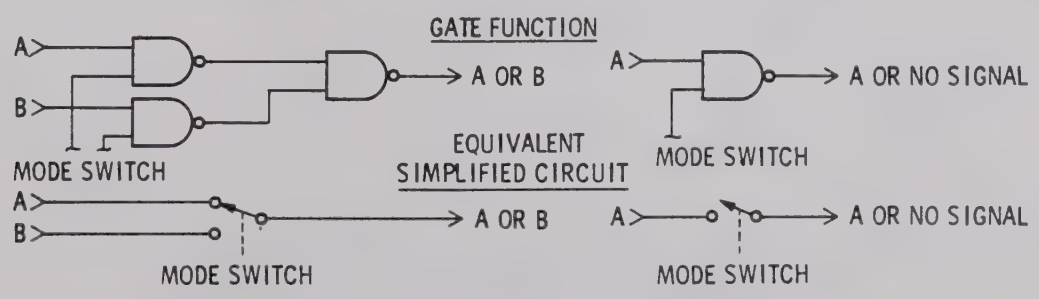

5-4. ASSEMBLY DRAWINGS

Component locations on the front panel, rear panel and attenuator assemblies are shown in pages 6-3 through 6-5. Component locations on the printed circuit board assembly are shown on the Test Point and Adjustment Point Location drawing (figure 4-1) in section 4.

5-5. SCHEMATIC DIAGRAMS

See section 6 of this manual for schematic diagrams.

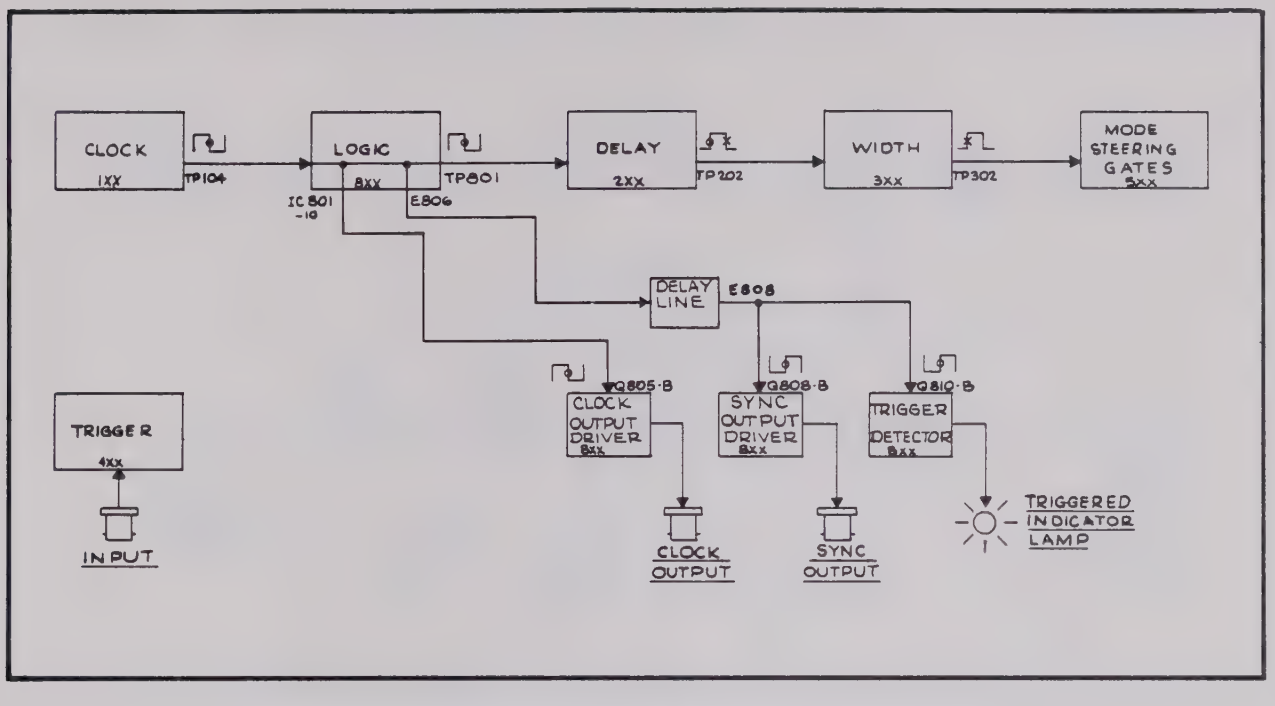

Figure 5-1. NORMAL Mode Signal Flow Diagram

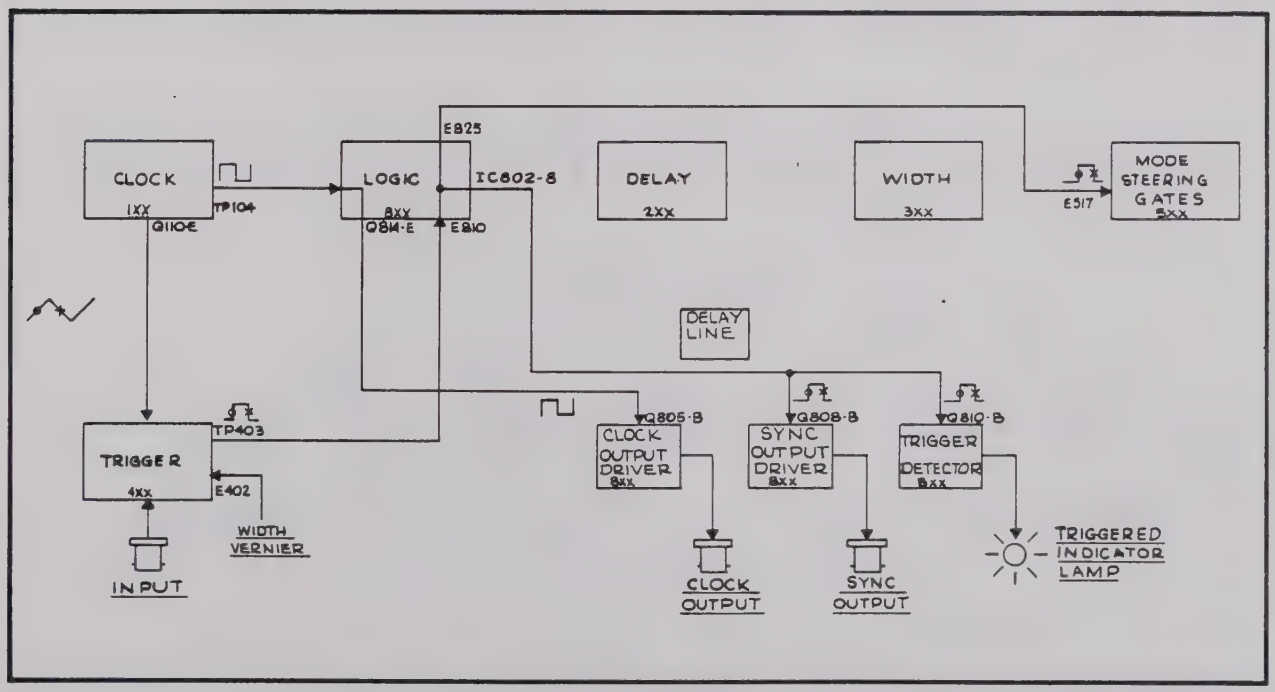

Figure 5-2. DUTY CYCLE Mode Signal Flow Diagram

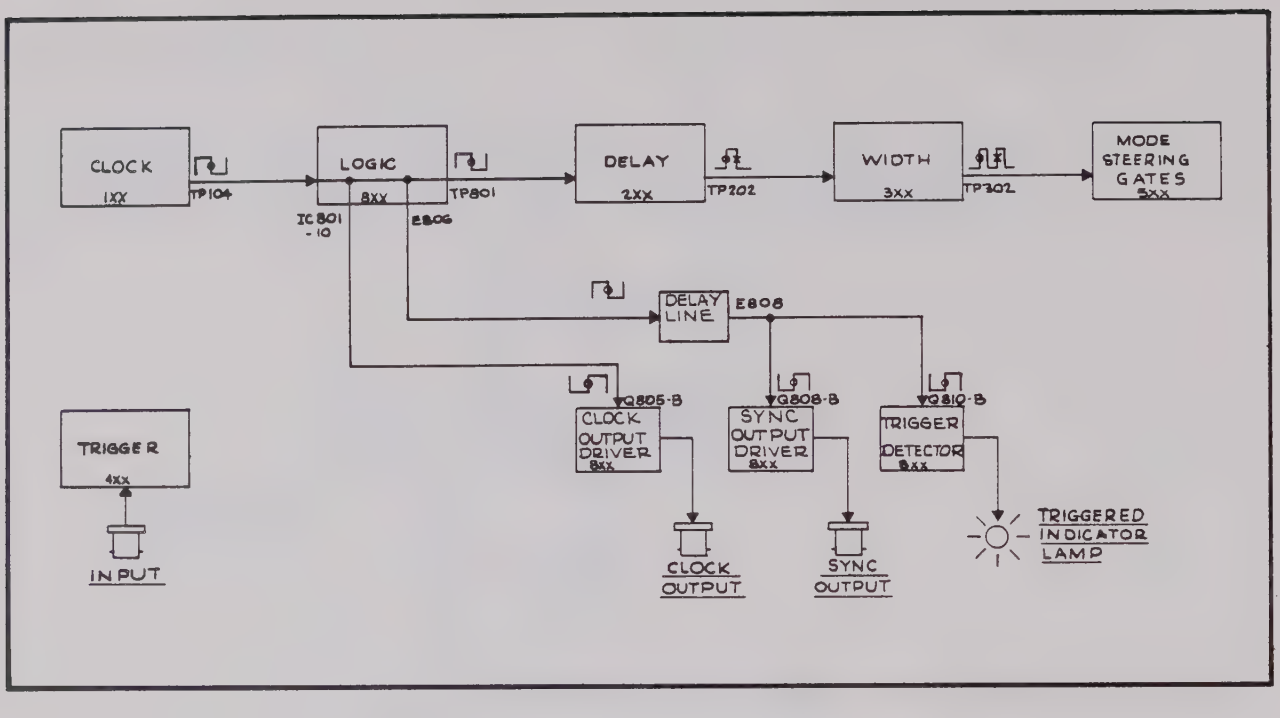

Figure 5-3. DBL PULSE Mode Signal Flow Diagram

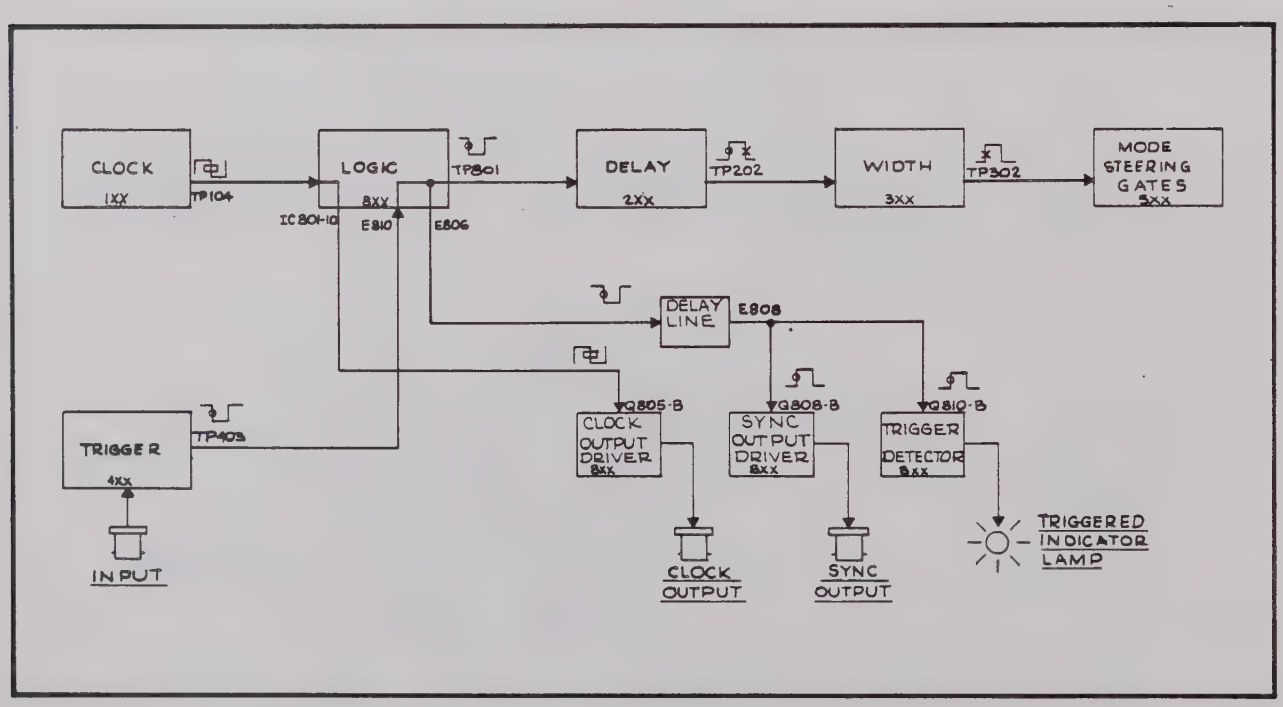

Figure 5-4. TRIGGER Mode Signal Flow Diagram

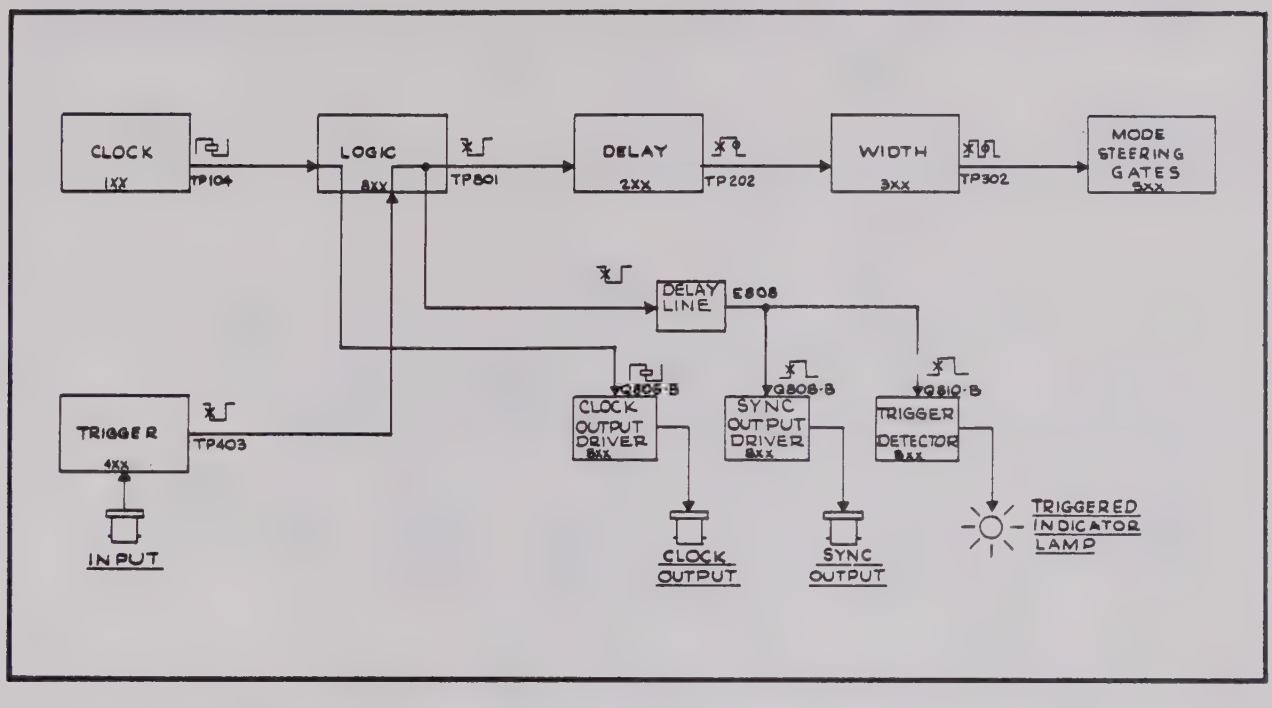

Figure 5-5. TRIGGER DBL PULSE Mode Signal Flow Diagram

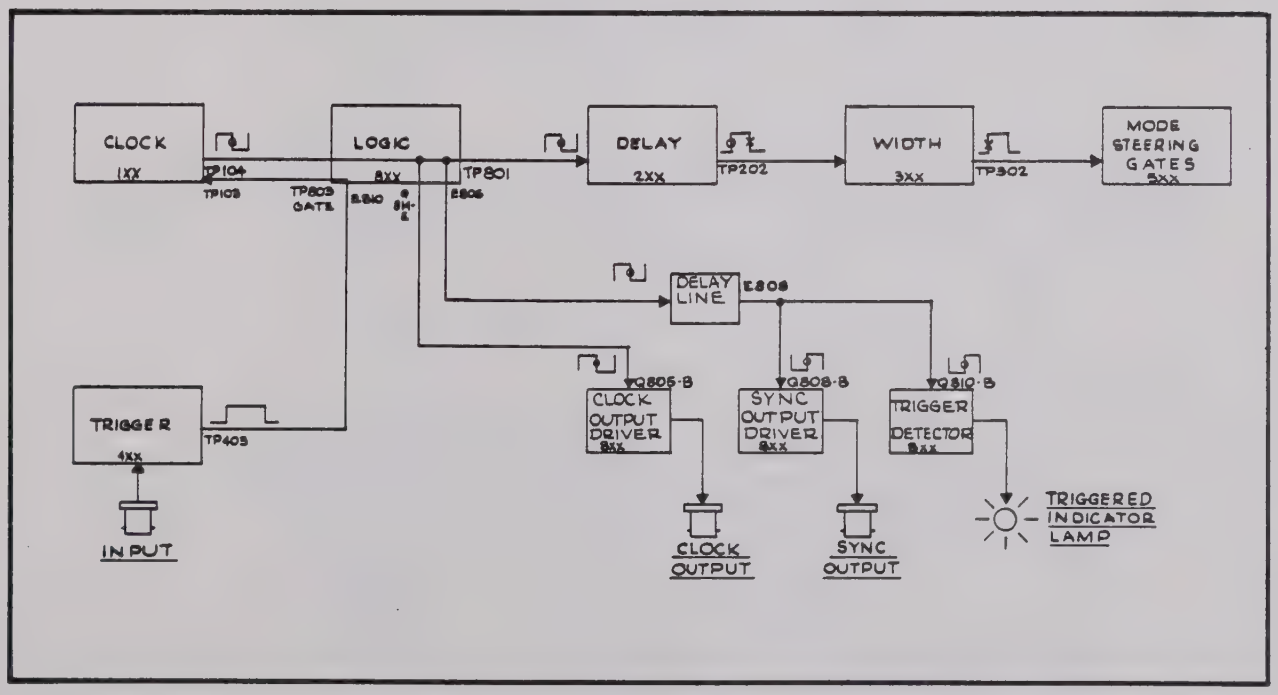

Figure 5-6. GATE Mode Signal Flow Diagram

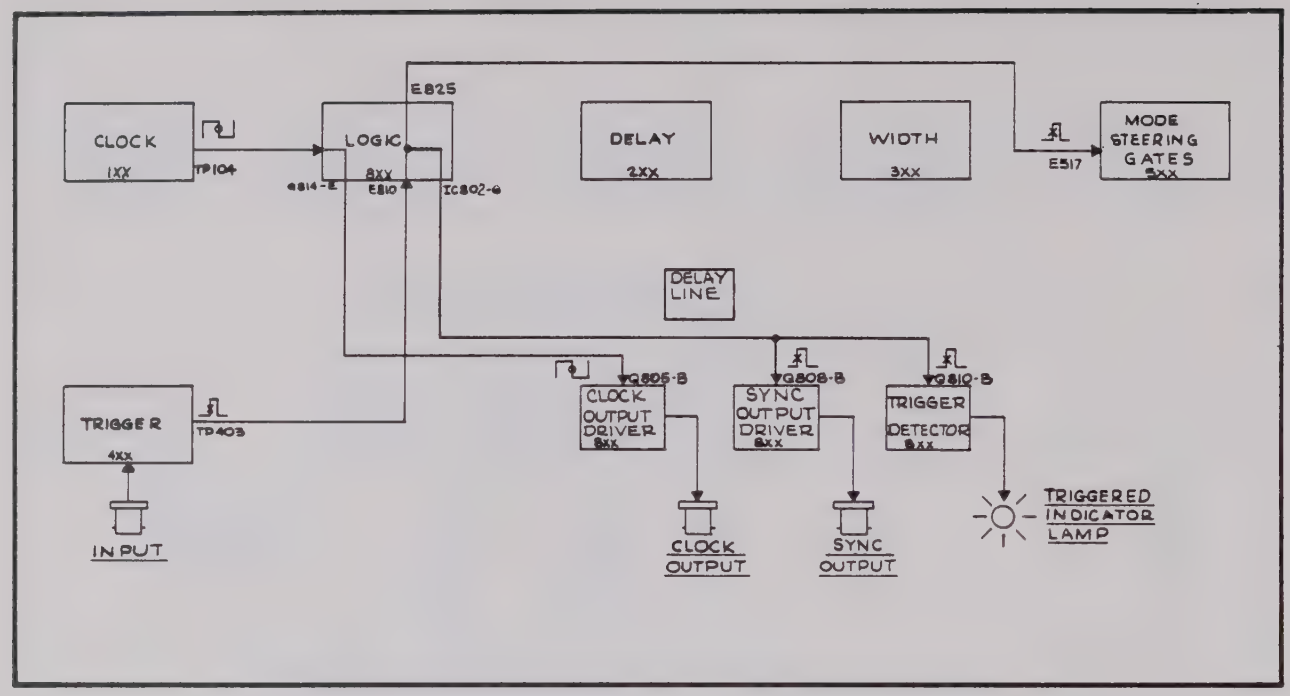

Figure 5-7. AMPLIFIER Mode Signal Flow Diagram

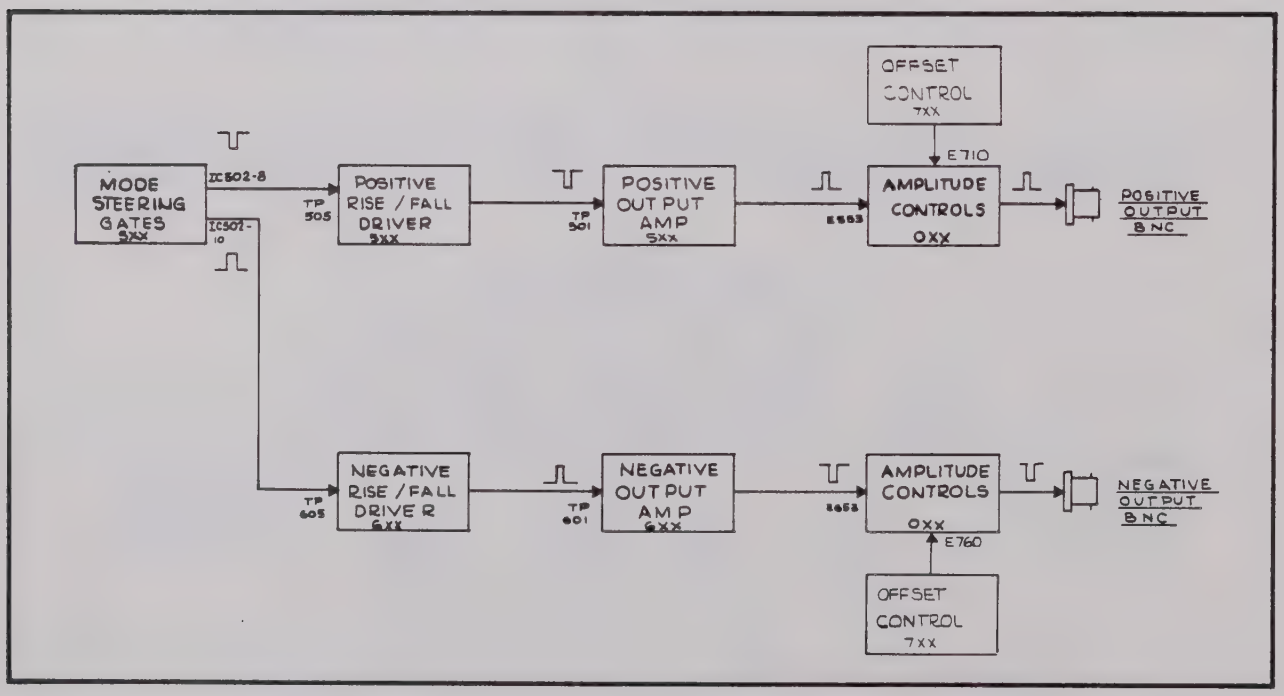

Figure 5-8. Output Signal Flow Diagram

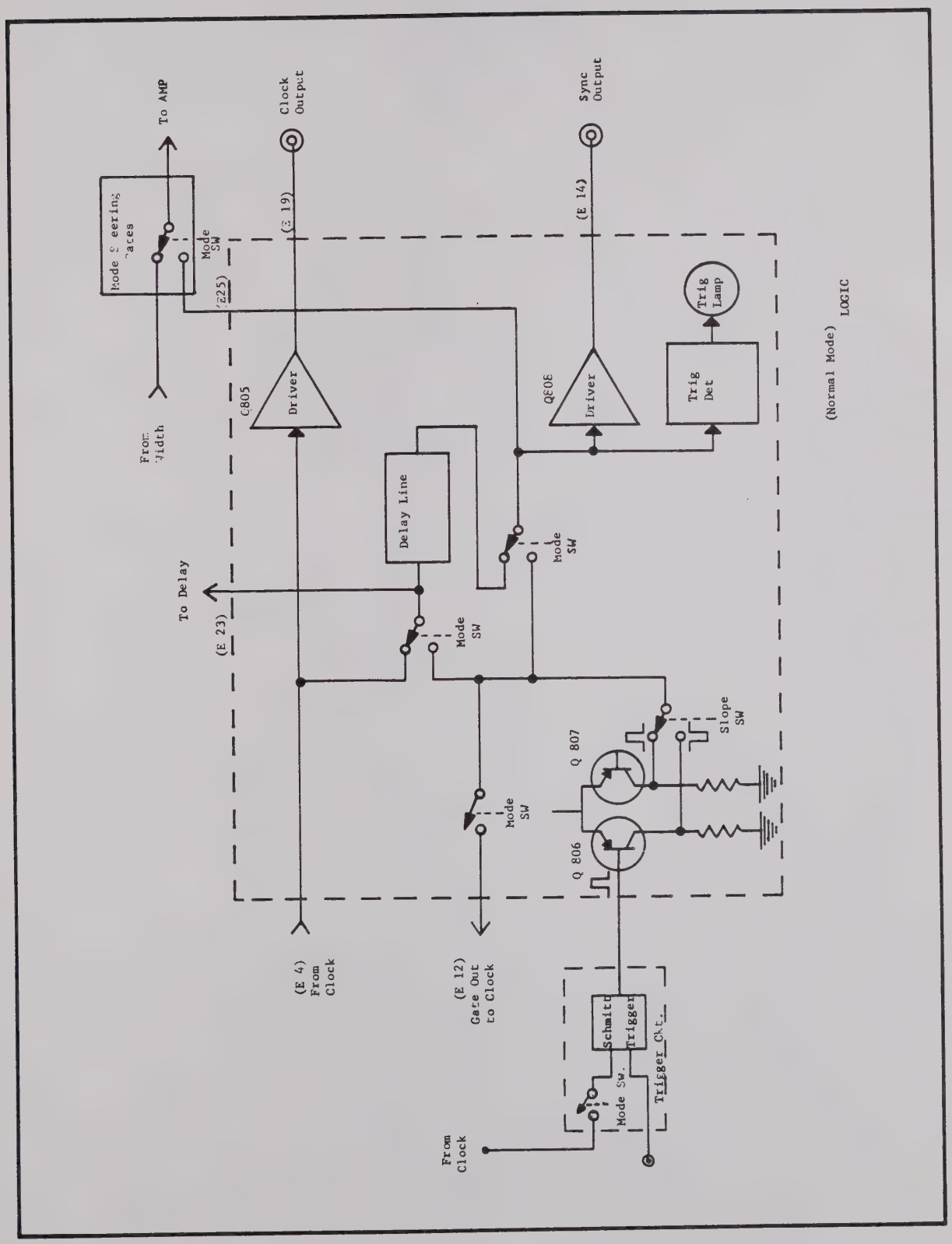

Figure 5-9. Simplified Logic Signal Flow Diagram

NOTES

Section 6
DRAWINGS
(MODEL P25)

P00336400-35	Chassis Assembly	6-2
P00336200-5	Front Panel Assembly	6-3
P00336600-1	Attenuator Assembly	6-4
P00336300-1	Rear Panel Assembly	6-5
P00336100-35	Main PCB Assembly	6-6
P00336001	Schematic, Model P25	6-8

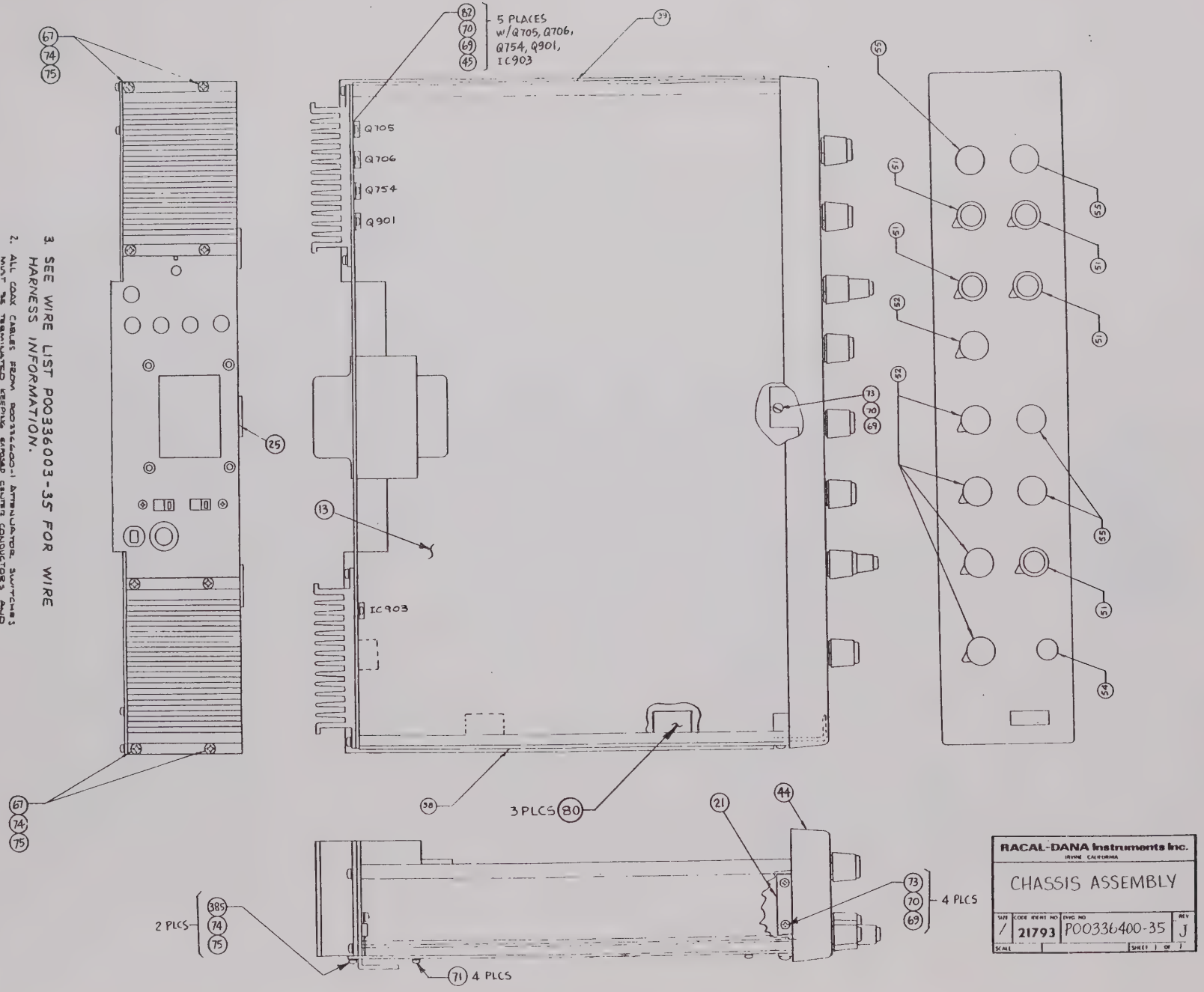

3. SEE WIRE LIST P00336003-35 FOR WIRE HARNESS INFORMATION.

2. ALL COAX CABLES FROM P00336600-1 ATTENUATOR SWITCHES MUST BE TERMINATED KEEPING EARTHED CENTER CONDUCTORS AND TWISTED SHIELD WIRES MIN. BUT AT EQUAL LENGTHS

1. LOSEN THREE SWITCH MOUNTING NUTS TO MOUNT PANEL

NOTES

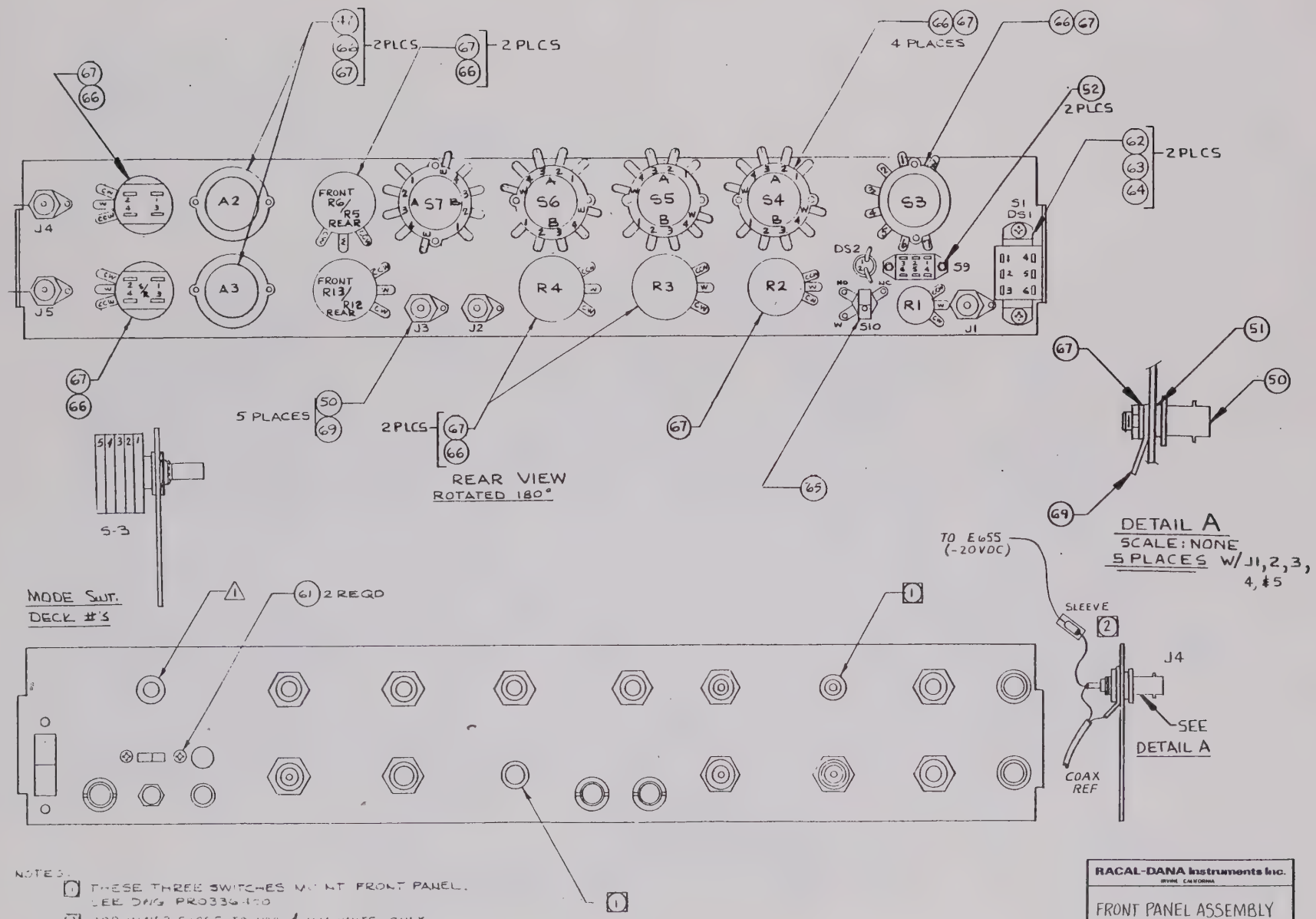

NOTES:

1. THESE THREE SWITCHES MOUNT FRONT PANEL. SEE DWG P00336400
2. ADD 1N4153 DIODE TO P22 & P23 UNITS ONLY.
3. SEE WIRE LIST P00336003-35 FOR WIRE HARNESS INFORMATION FOR P00336200-5.
4. SEE WIRE LIST P00336003-34 FOR WIRE HARNESS INFORMATION FOR P00336200-4.
5. USE A SMALL AMOUNT OF (ITEM 1) 920504 - SCOTCH GRIP ADHESIVE 4475 AT REAR OF LENS/LAMP ASSEMBLY TO RETAIN LAMP

RACAL-DANA Instruments Inc. IRVINE CALIFORNIA			
FRONT PANEL ASSEMBLY			
SIZE /	CODE IDENT NO 21793	DWG NO P00336200-5	REV Z
SCALE		SHEET 1 OF 1	

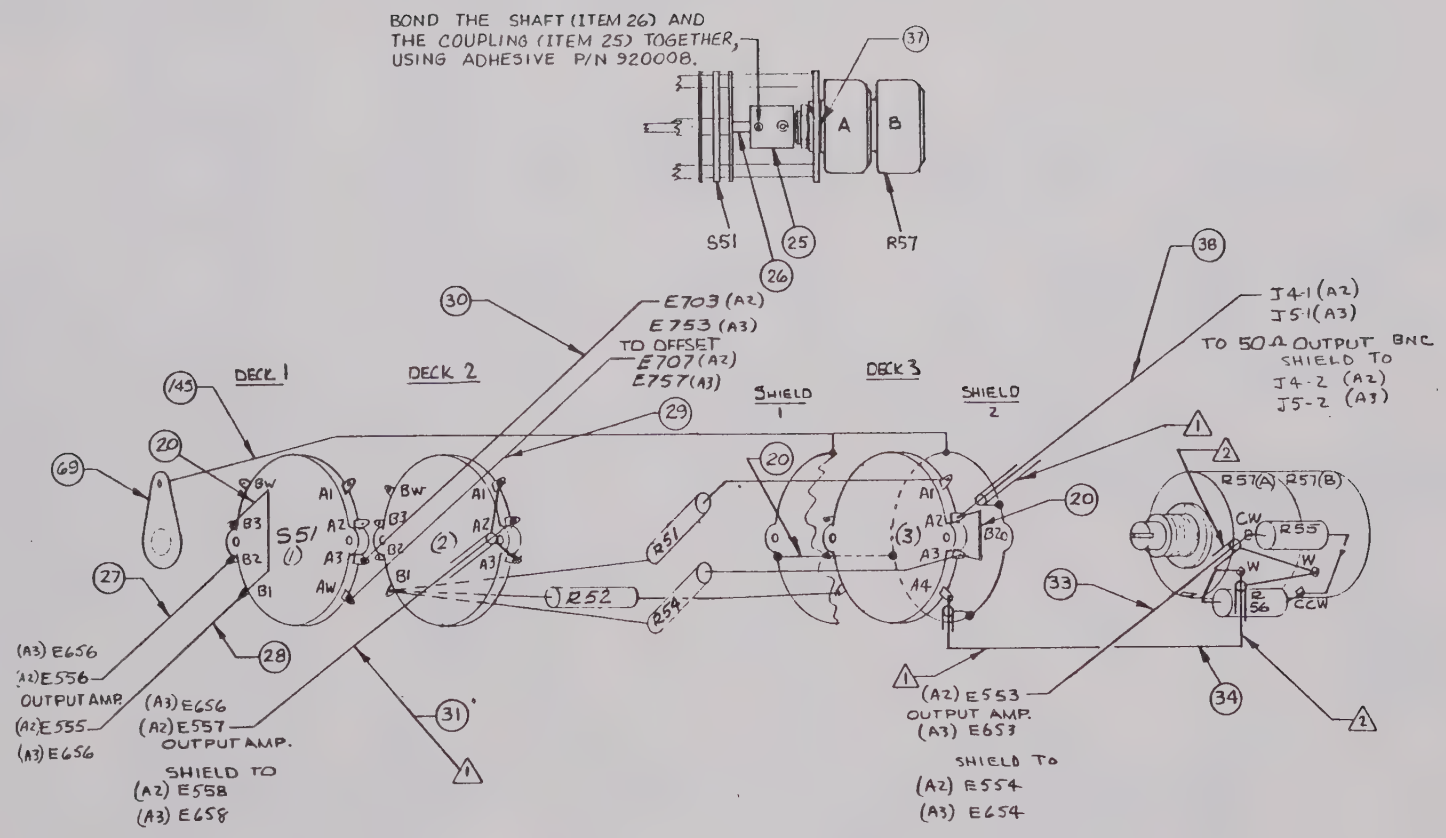

2 TERMINATE THESE COAX CABLES KEEPING UNSHIELDED CENTER CONDUCTOR AS SHORT AS POSSIBLE ; HOWEVER BOTH CONDUCTORS MUST BE THE SAME LENGTH.

1 TERMINATE THESE COAX CABLES KEEPING UNSHIELDED CENTER CONDUCTOR AS SHORT AS POSSIBLE AT ATTENUATOR END CONNECTION. THIS MAY REQUIRE EXPOSED COAX DRAIN WIRE TO BE UNSLEEVED

NOTES

RACAL-DANA Instruments Inc. IRVINE, CALIFORNIA			
ATTENUATOR ASSEMBLY			
SIZE /	CODE IDENT NO 21793	DWG NO P00336600-1	REV L
SCALE		SHEET 1 OF 1	

NOTES:
1. S2 MAY BE RIVETED ON IN LIEU OF BOLTING
2. FOR SCHEMATIC SEE P00336001
3. SLEEVE ALL AC TERMINATIONS, USING ITEMS 19 & 20

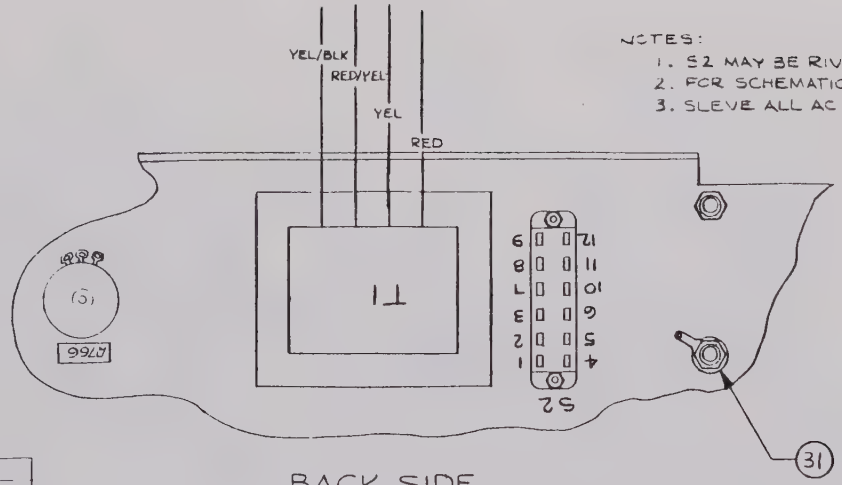

BACK SIDE

WIRE LIST

FROM	TO	COLOR	ITEM
AC BLK	F1 CENTER	BLK	—
AC WHT	S2	WHT	—
AC GRN	UNTERMINATED	GRN	—
	UNTERMINATED	BLK	19
UNTEMINATED	S2	BLK	20
S2 A1	T1 YEL	YEL	—
S2 B3	T1 RED	RED	—
S2 B2	T1 RED/BLK	RED/BLK	—
S2 A3	T1 BLK/YEL	BLK/YEL	—

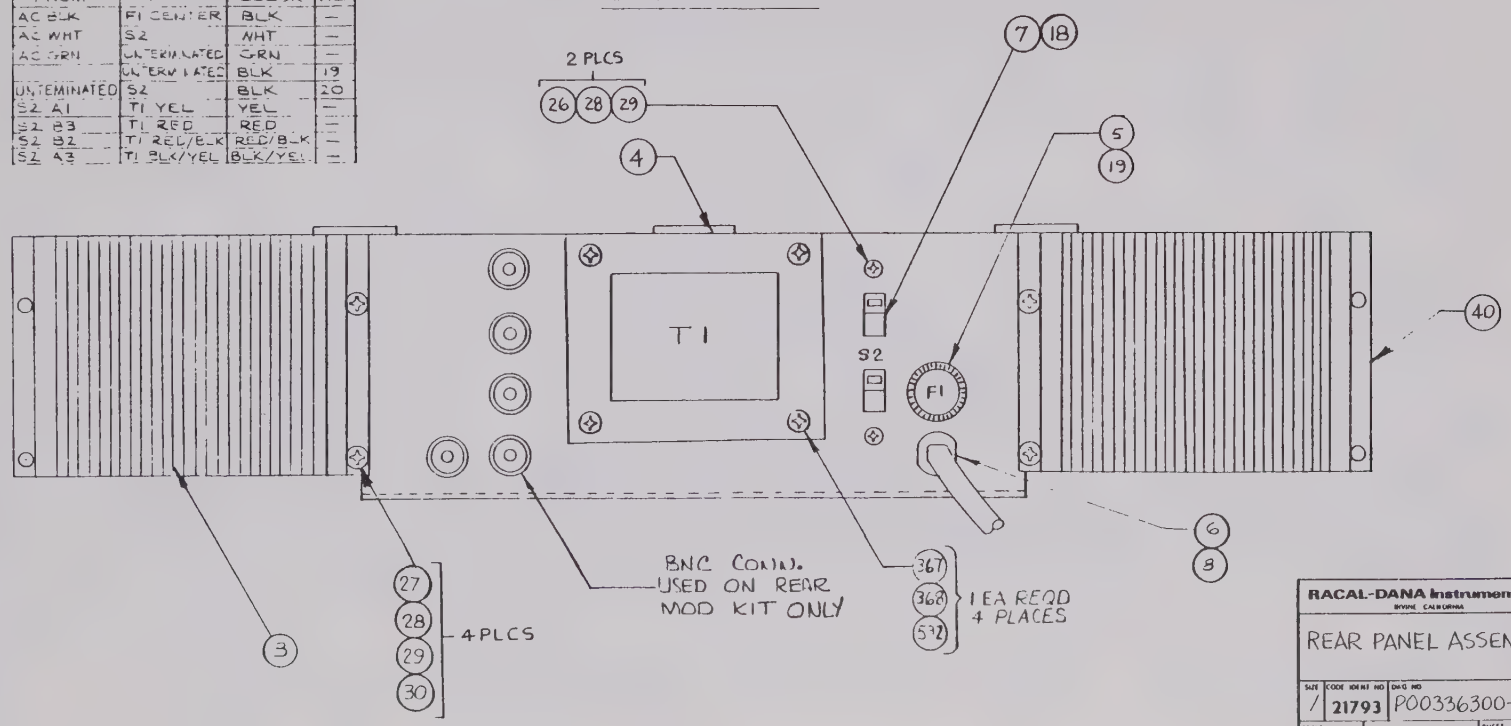

RACAL-DANA Instruments Inc.
IRVINE CALIFORNIA

REAR PANEL ASSEMBLY

SIZE	CODE IDENT NO	DWG NO	REV
/	21793	P00336300-1	P

SCALE | SHEET | OF

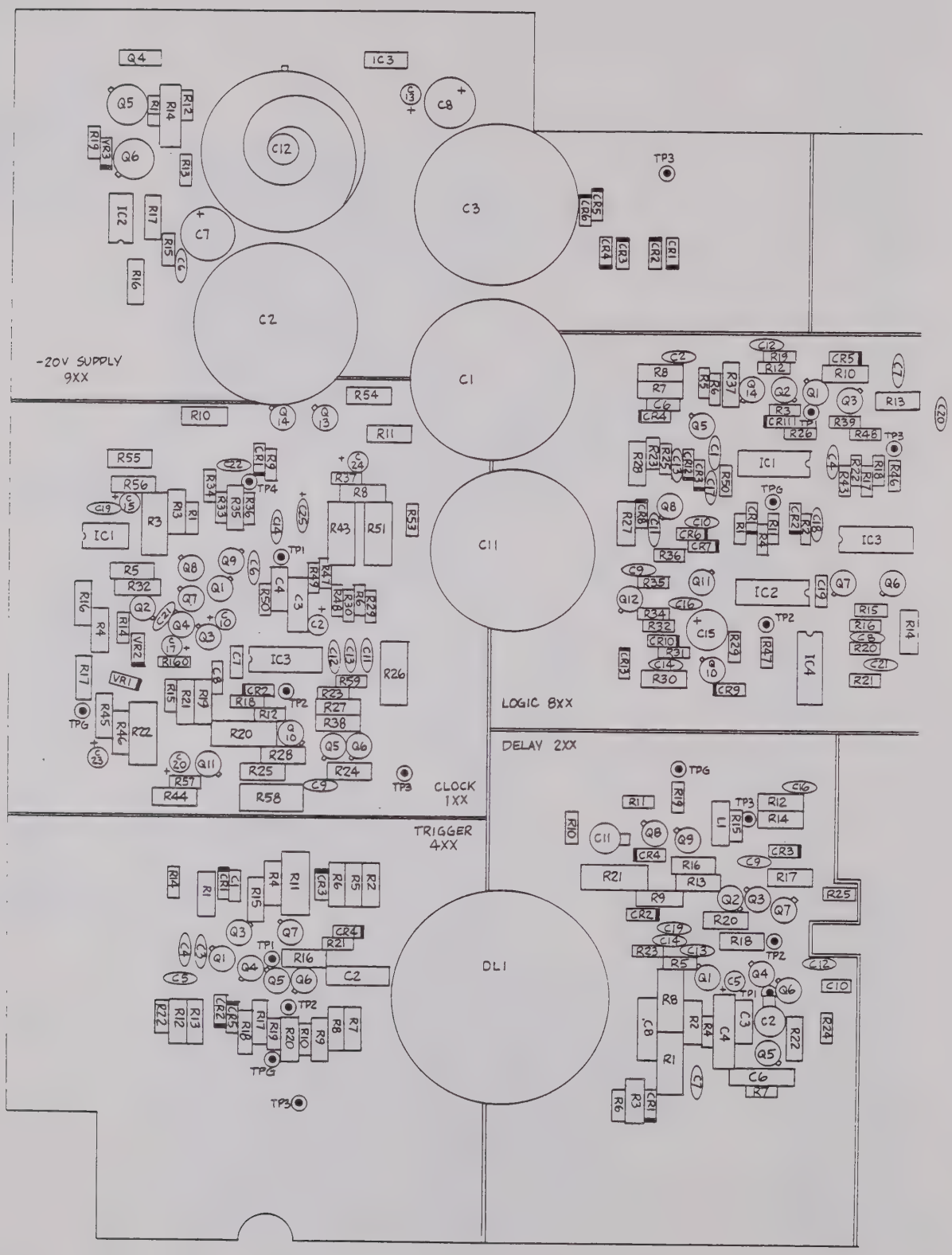
-20V SUPPLY
9XX
LOGIC 8XX
DELAY 2XX
CLOCK
1XX
TRIGGER
4XX

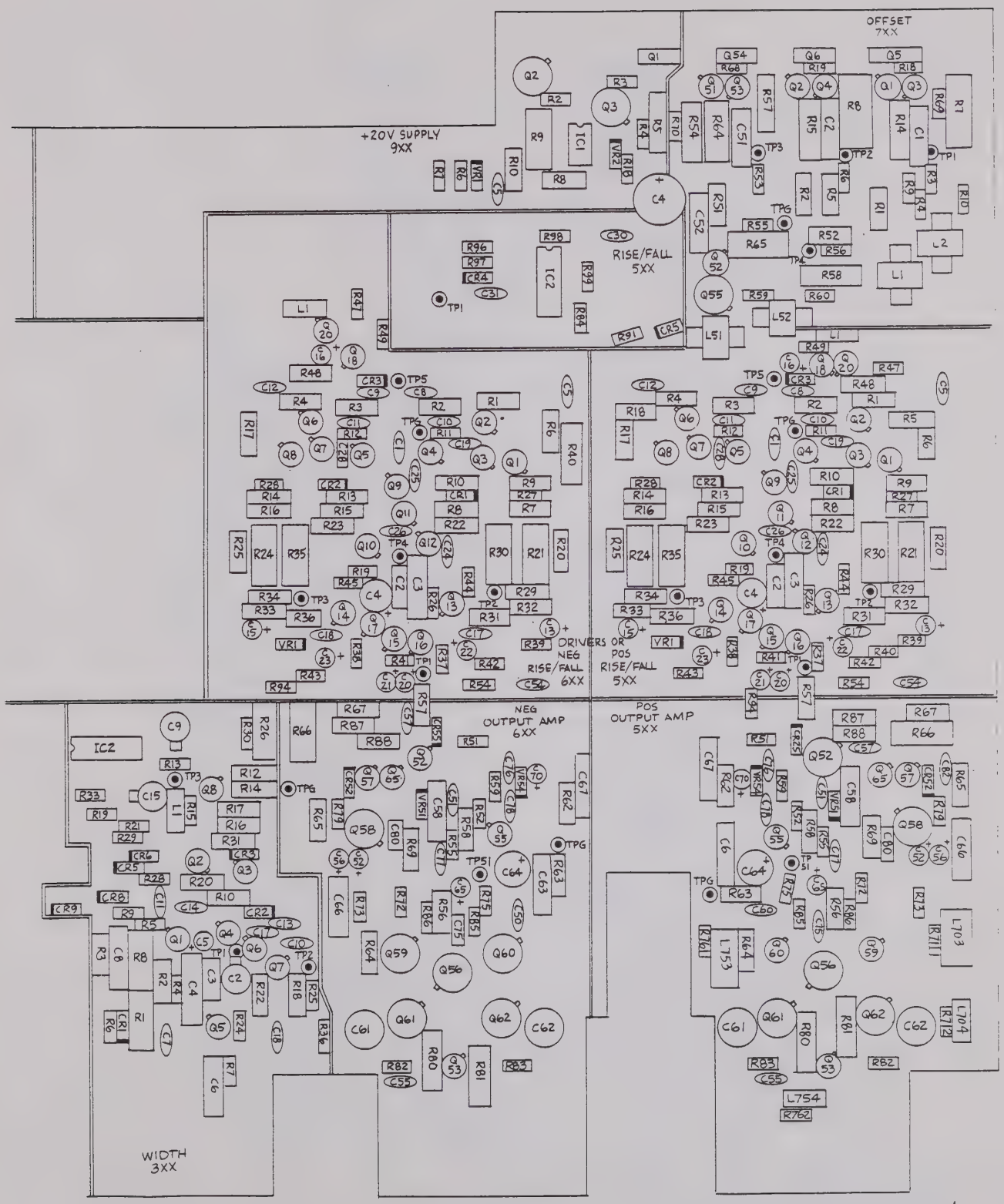

MAIN PCB ASSEMBLY
P00336100-35 REV. AA

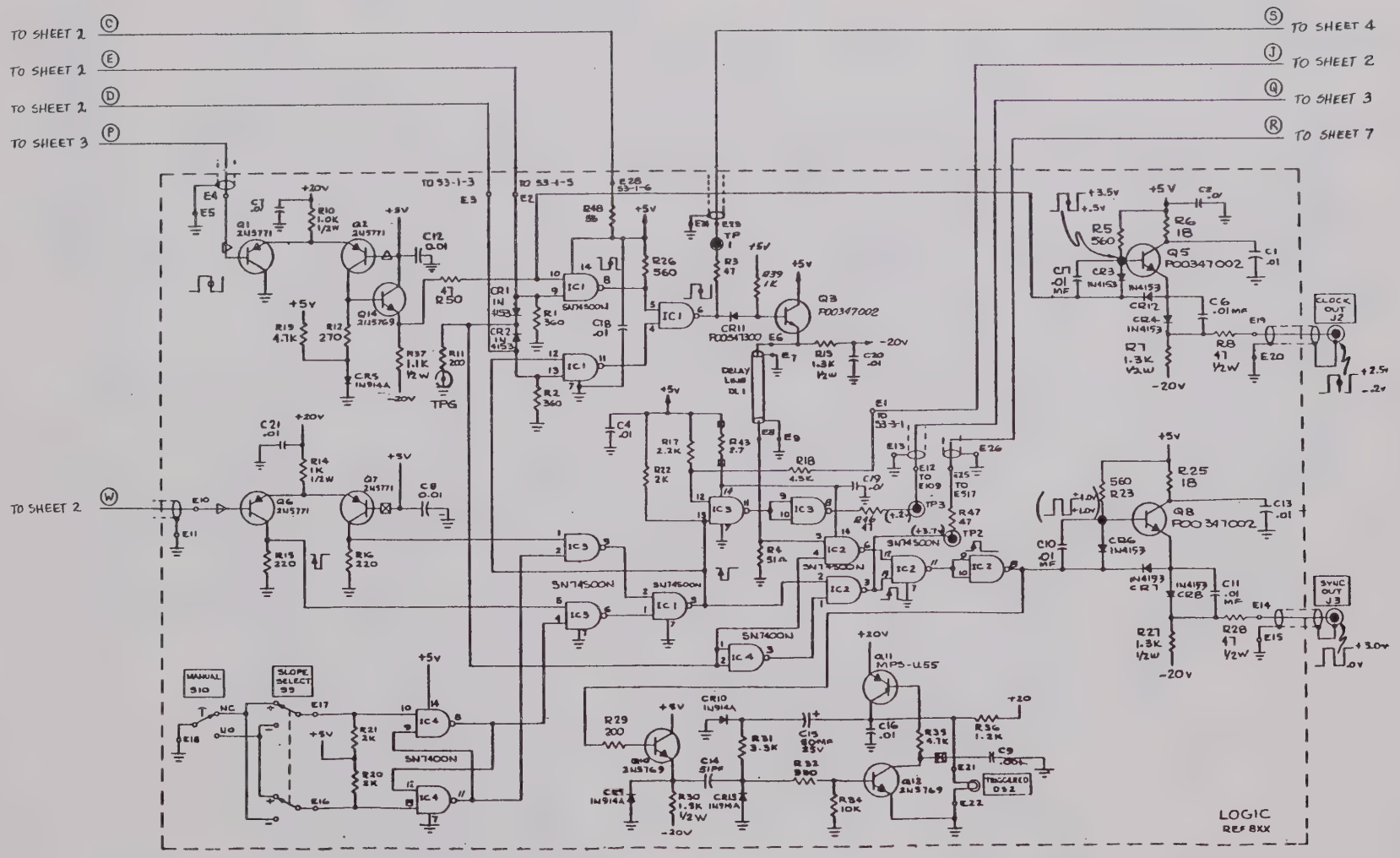

INPUT SECTION

SHEET 1

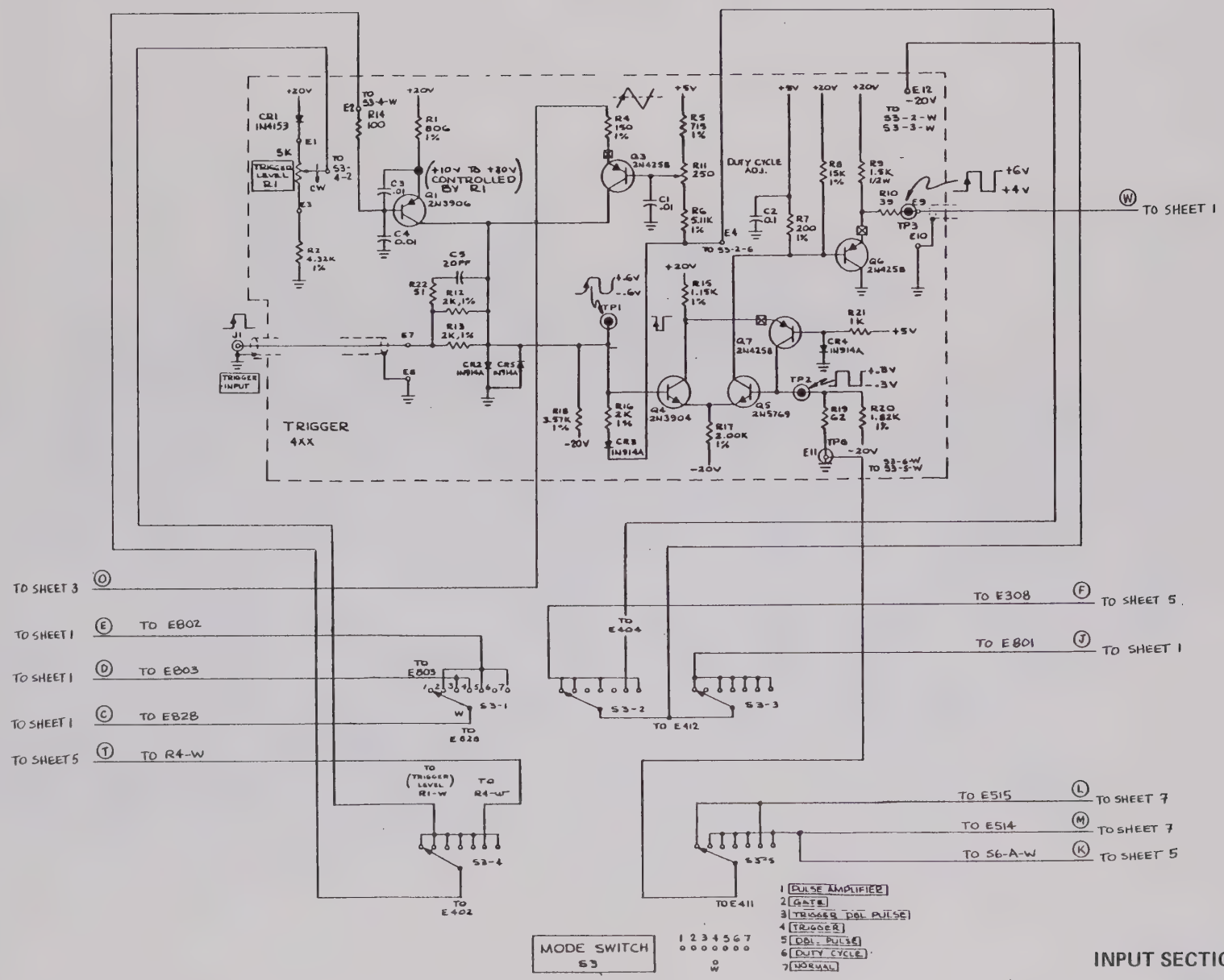

INPUT SECTION
SHEET 2

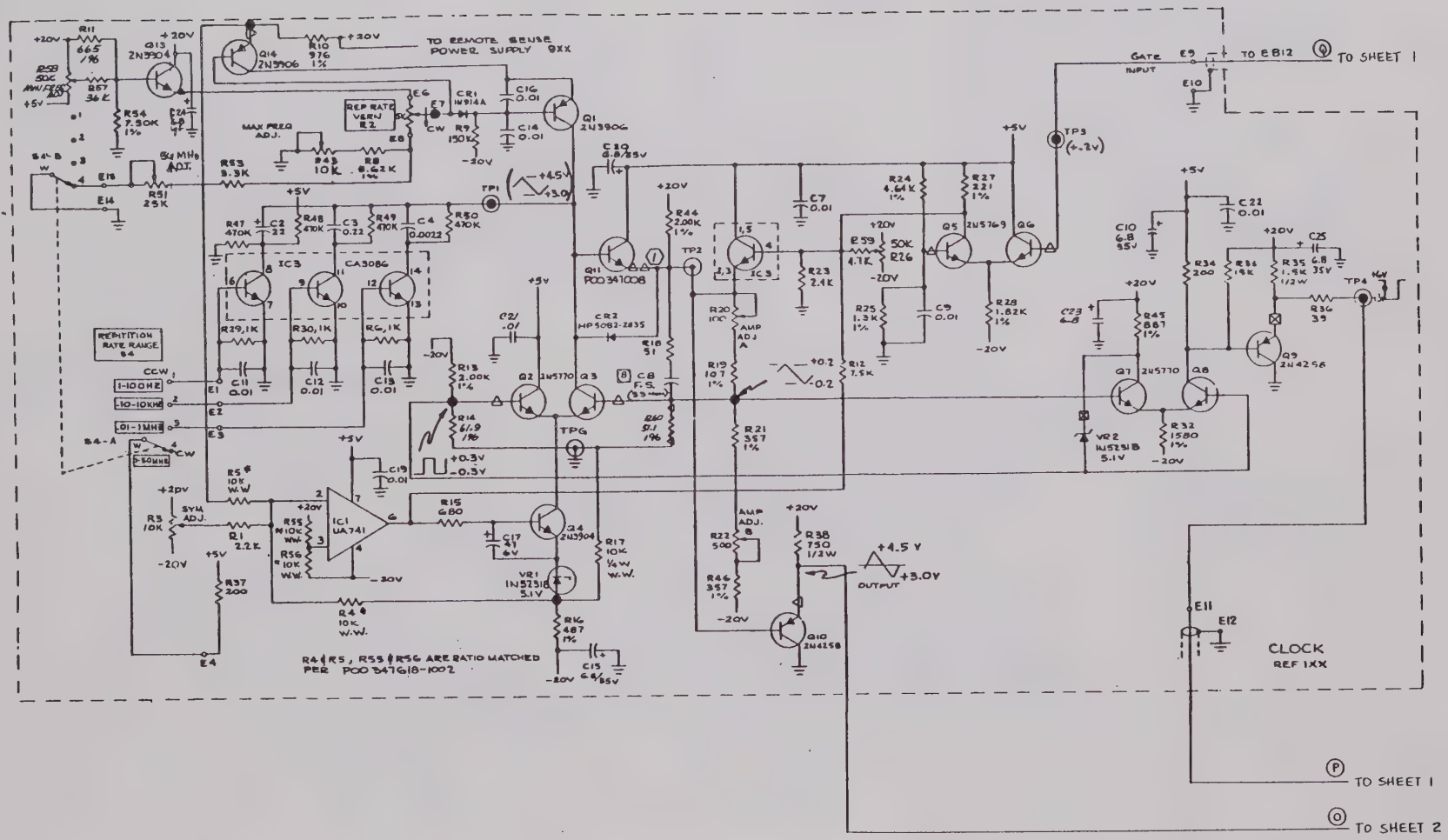

INPUT SECTION

SHEET 3

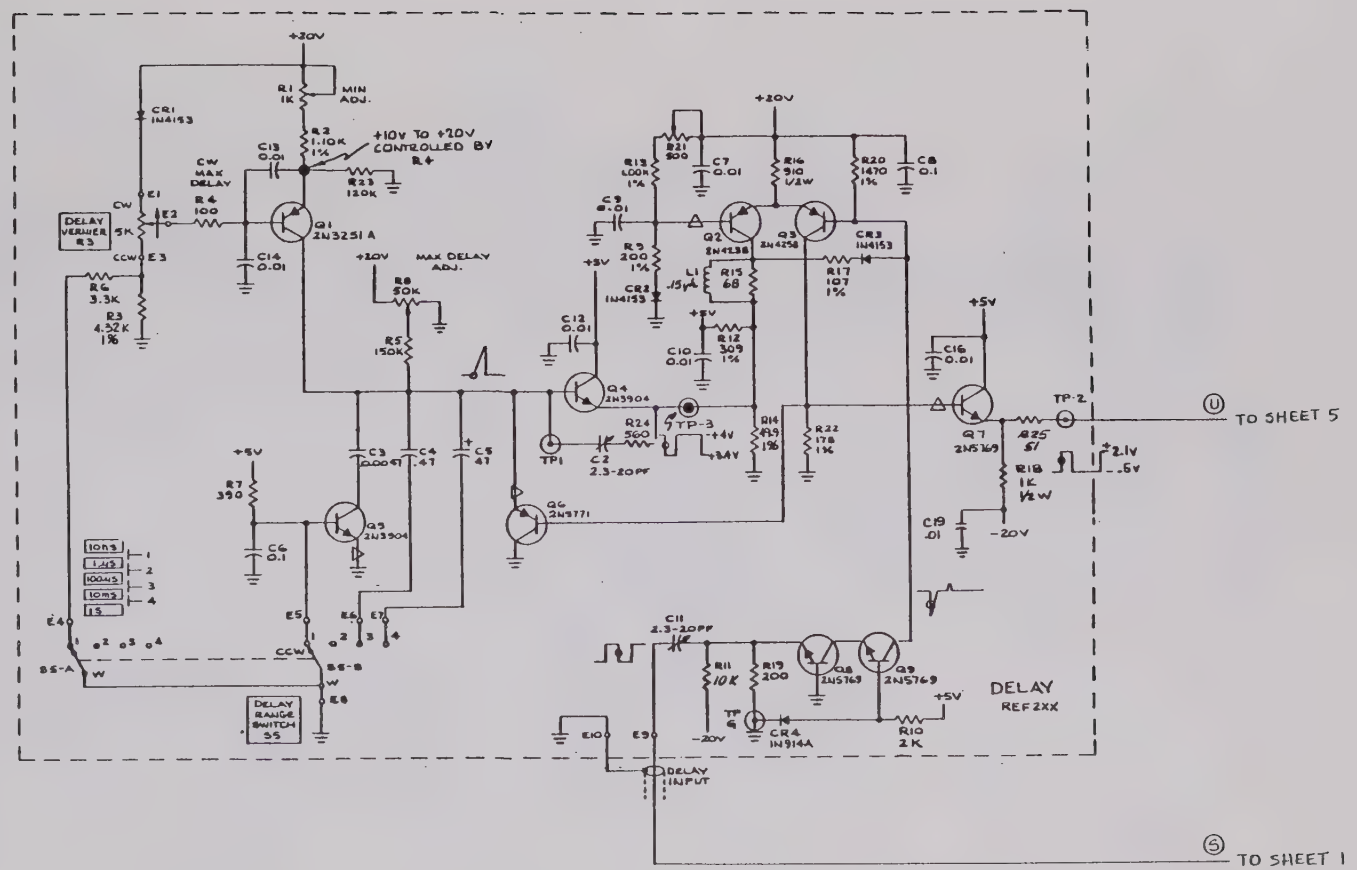

INPUT SECTION

SHEET 4

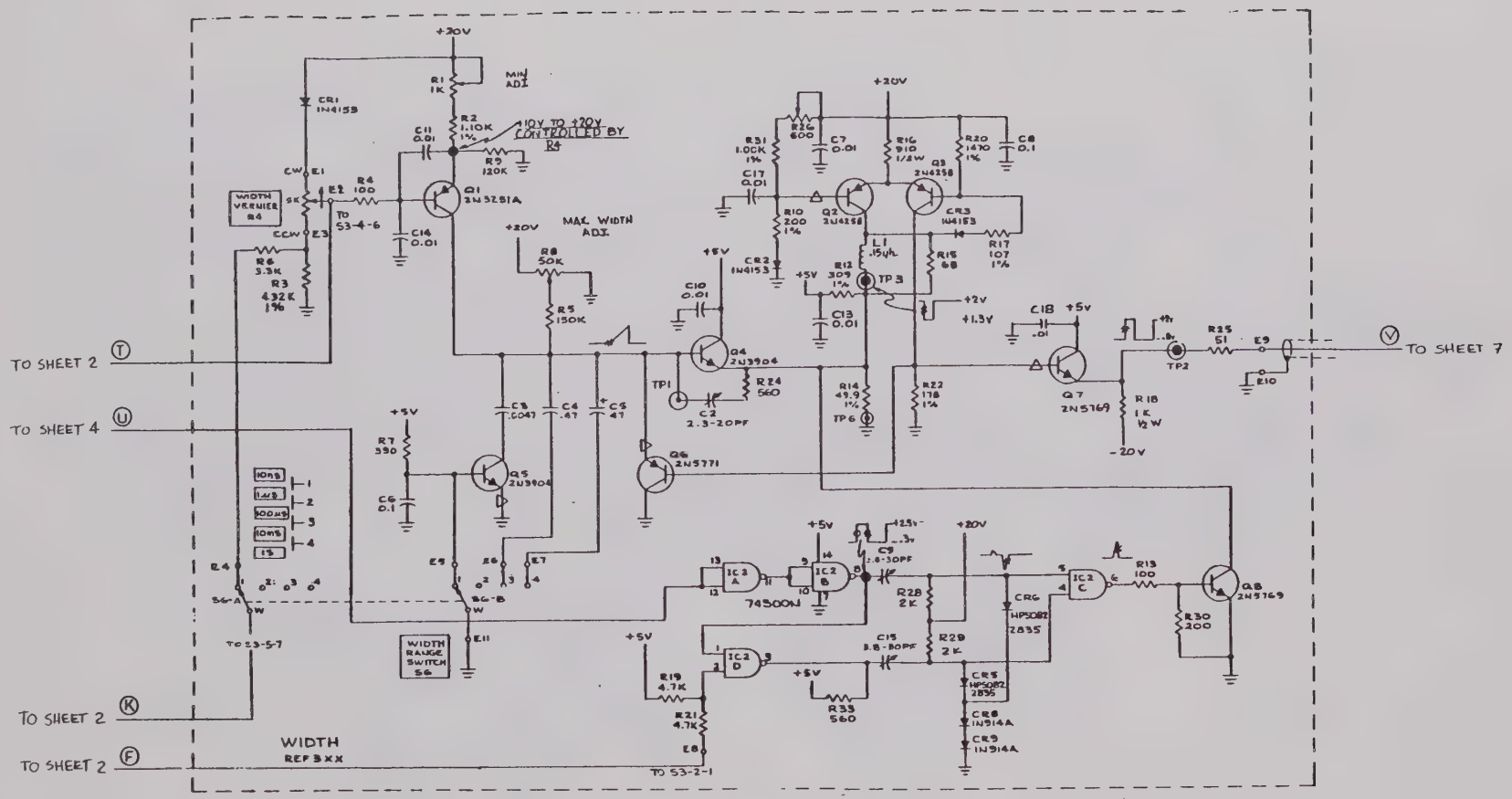

INPUT SECTION

SHEET 5

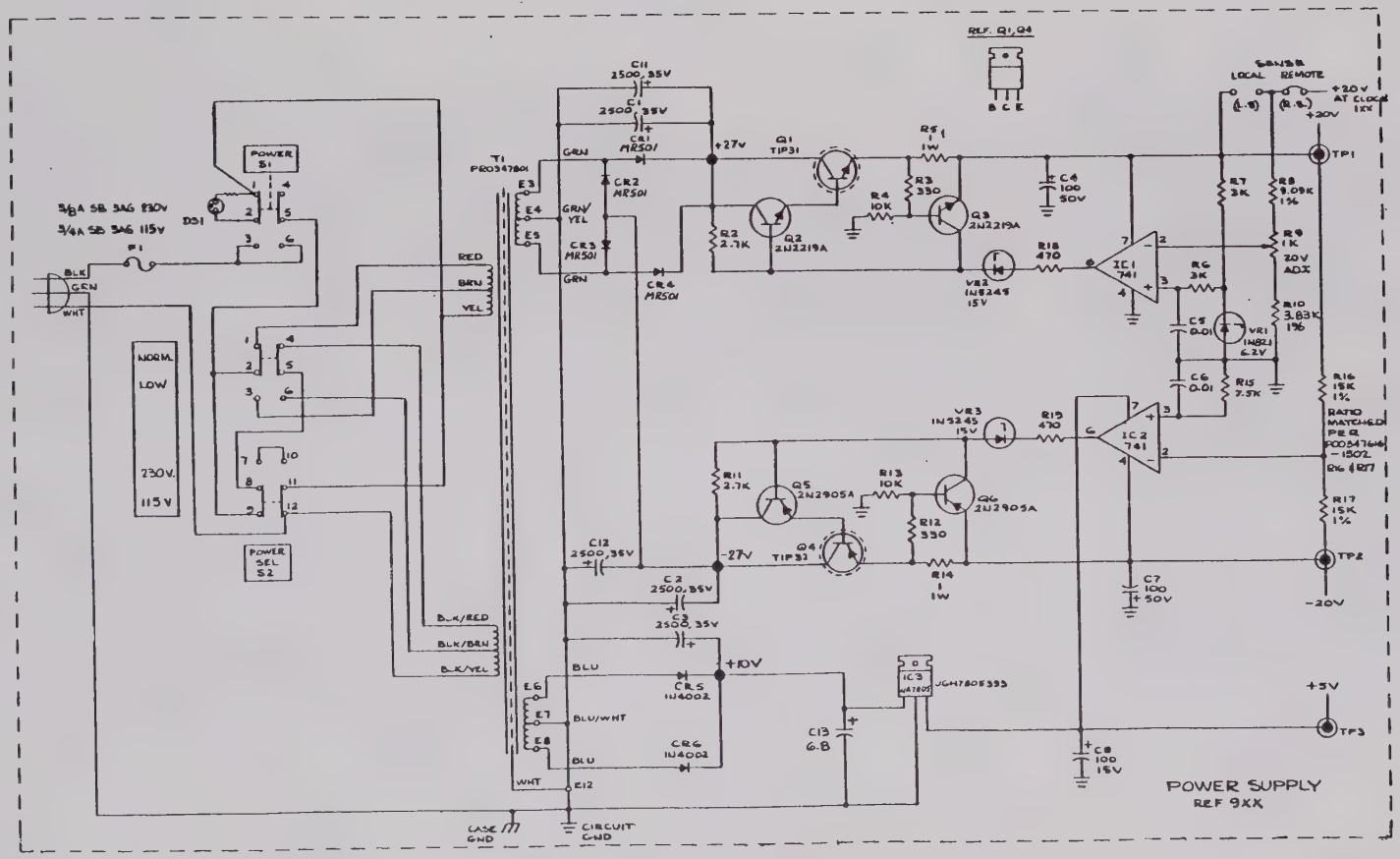

INPUT SECTION

SHEET 6

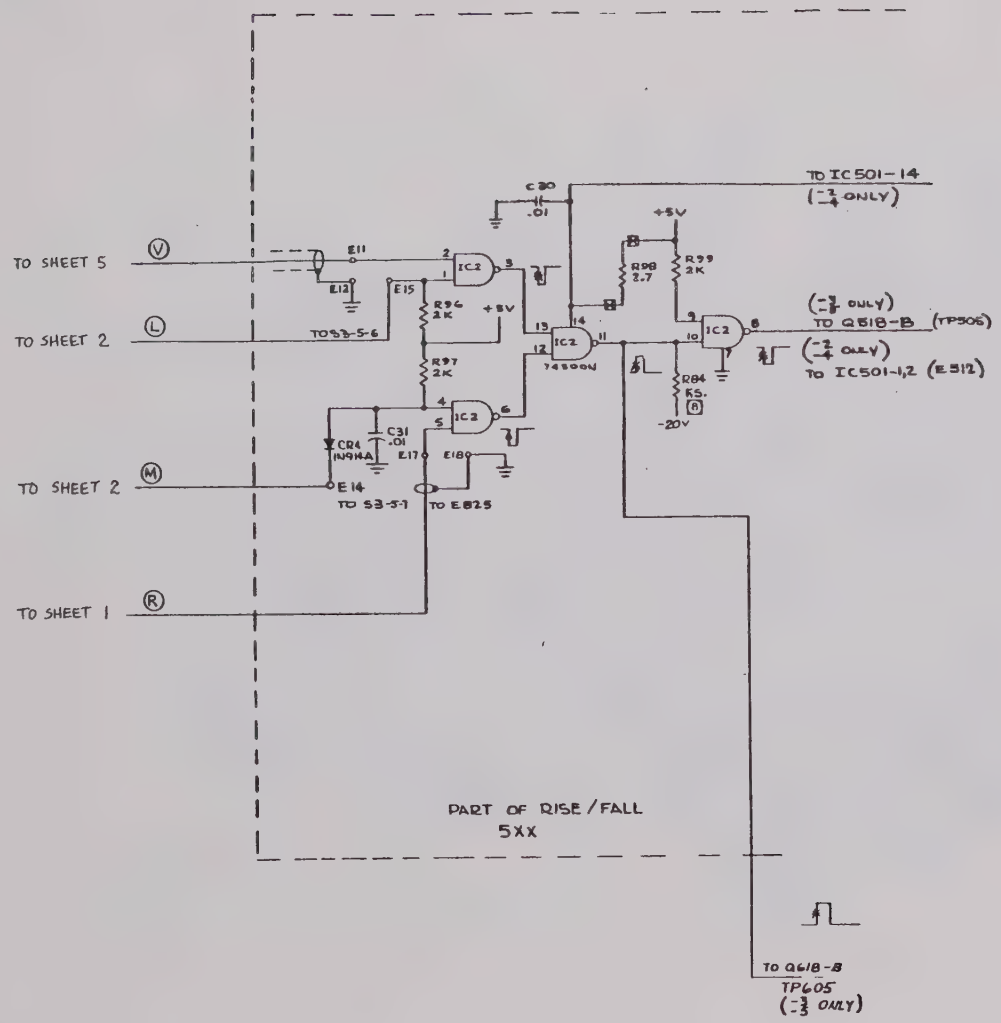

9. R755 1.60K ±1% FOR P22 & P24
R755 1.5 K FOR P23 & P25

8. DENOTED COMPONENTS ARE SELECTED IN TEST

REF DESIG	APPROX VALUE
C554, C657, C575, C578	0
R557 (FOR P22, P23)	51Ω
R557 (FOR P24, P25)	60.4Ω, 1%
R572, R672	20Ω
R575, R675	27Ω
R657 (FOR P23)	51Ω
R657 (FOR P25)	60.4Ω, 1%
R716, R717	0
C601, C601	0
C108	33
R584	0
C654, C657, C675	0
R554, R654	0

7. WAVEFORM TEST CONDITIONS: UNLESS OTHERWISE SPECIFIED

MODE — TRIGGER
REP RATE — 10K Hz – 1M Hz VERNIER @ MIN
DELAY — 1.0S – 100.0S VERNIER @ MIN
WIDTH — 1.0S – 100.0S VERNIER @ MIN
RISE/FALL (P24, P25 ONLY) — 5nS – 500nS VERNIER @ MIN

MEASUREMENTS MADE W/COAX TEST CABLE CONNECTING CLOCK OUTPUT W/ INPUT. THE LEVEL CONTROL IS ADJUSTED UNTILL TRIGGERED LAMP IS ILLUMINATED.

6. ALL VOLTAGES ARE NOMINAL VALUES
5. ALL 1% RESISTORS ARE 1/2 W
4. ALL CAPACITORS ARE IN µF.
3. ALL RESISTORS ARE IN OHMS ±5%, 1/4W.
2. (I) FACTORY SELECT BEAD, ▷ DENOTES ½ BEAD. ☒ DENOTES FULL BEAD.
1. F.S. MEANS FACTORY SELECT

NOTES: UNLESS OTHERWISE SPECIFIED.
CONFIGURATION
P.C. BOARD P00336111-1A

INPUT SECTION

SHEET 7

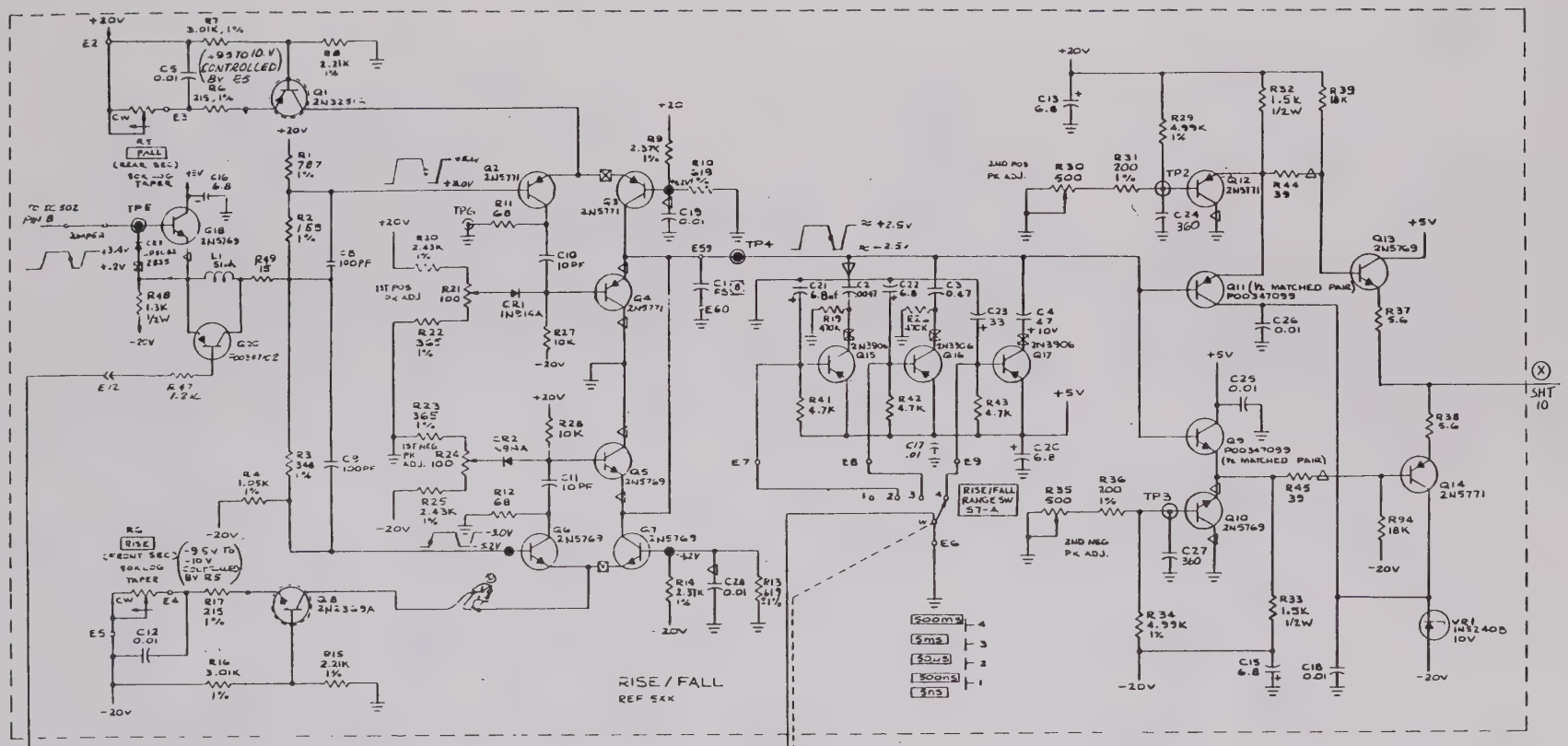

OUTPUT SECTION

SHEET 8

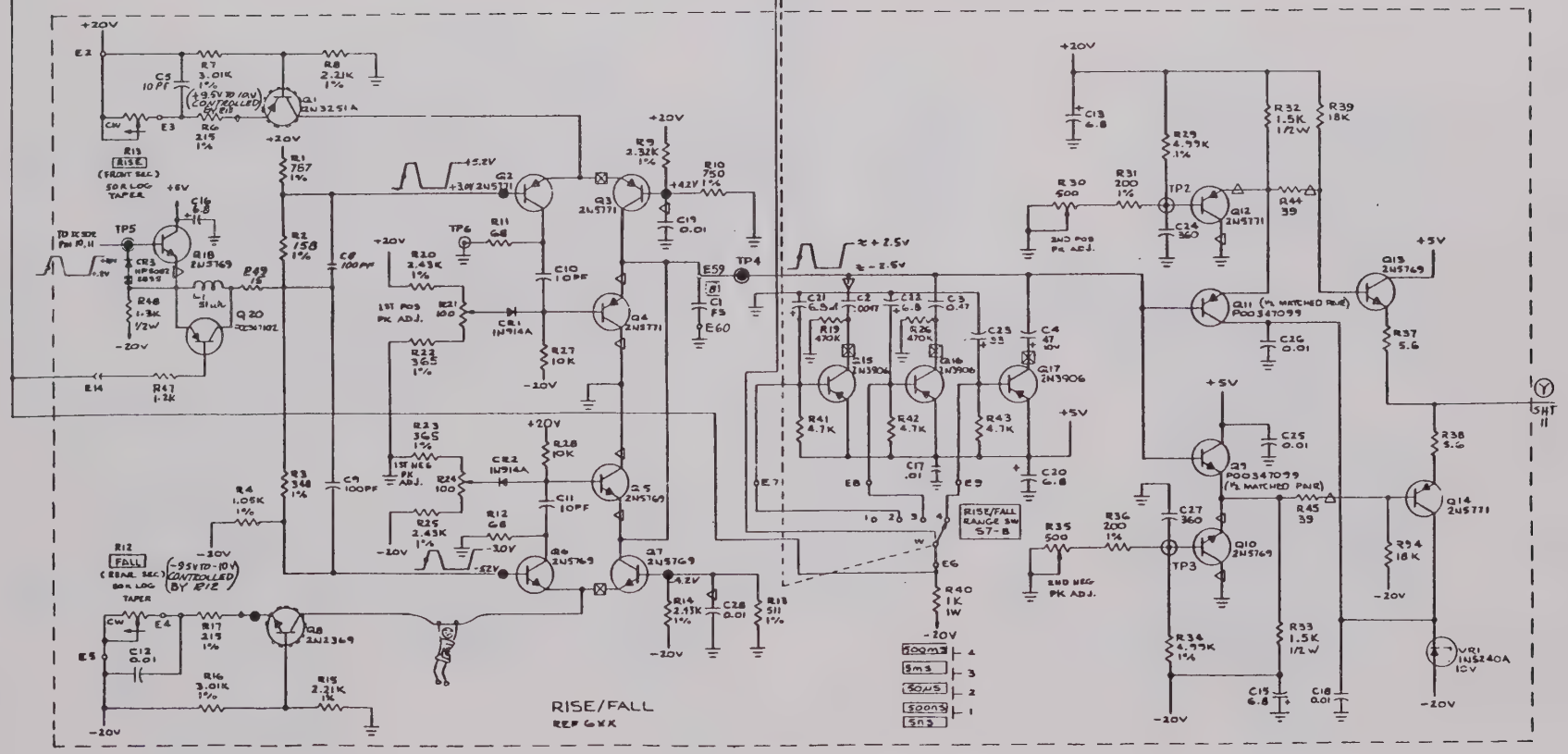

OUTPUT SECTION

SHEET 9

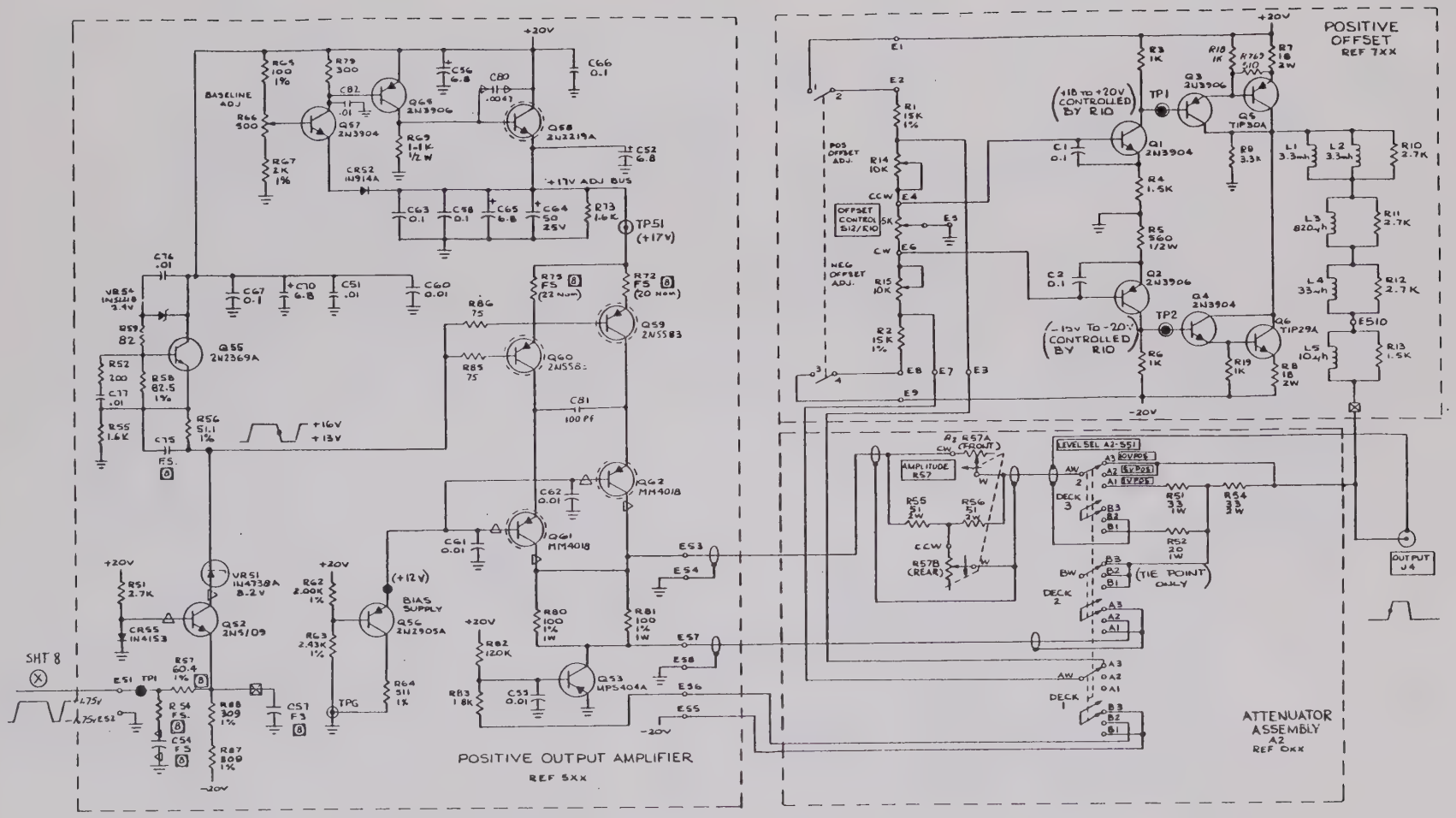

OUTPUT SECTION

SHEET 10

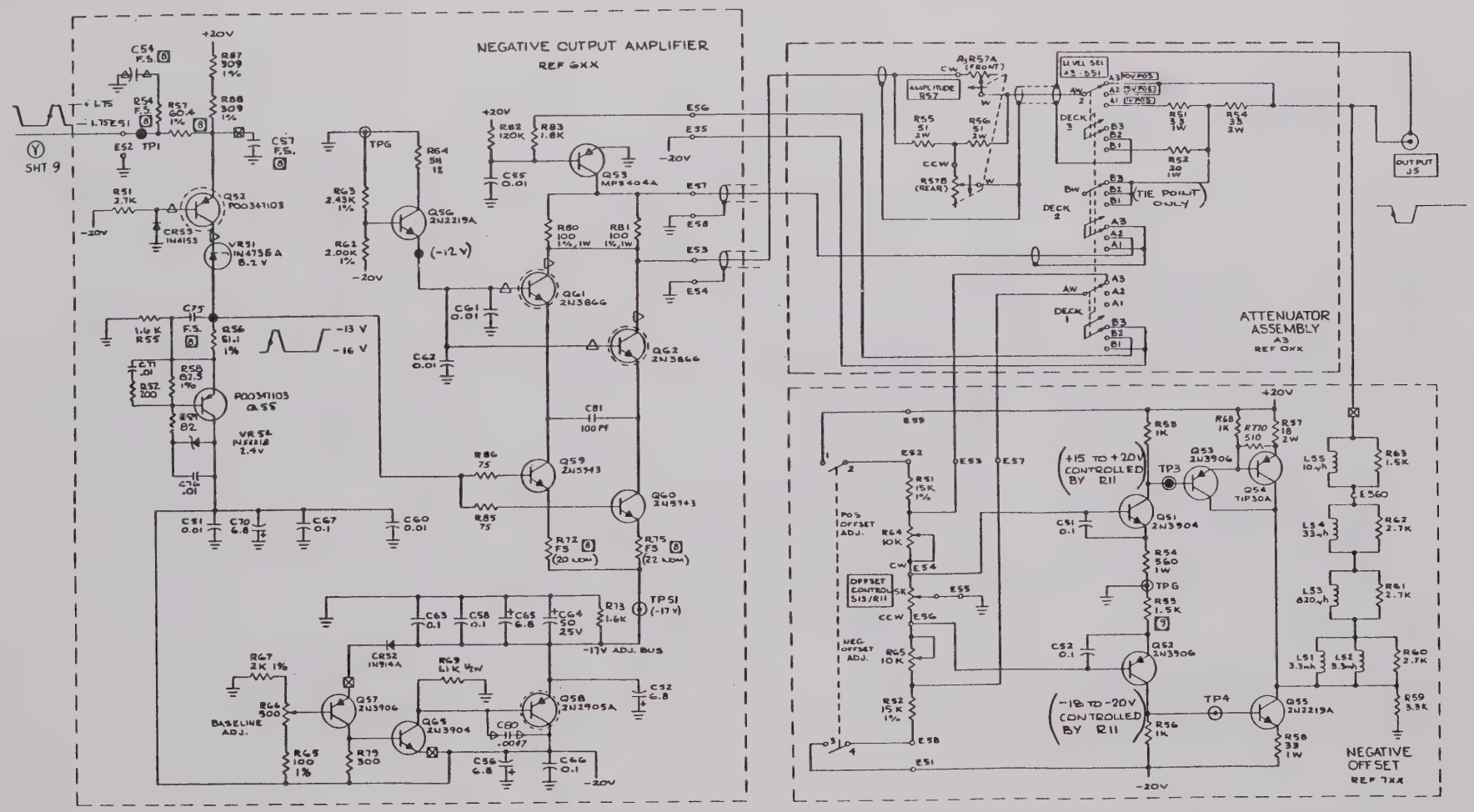

OUTPUT SECTION

SHEET 11

Section 7

PARTS LIST

(MODEL P25)

7.1 This section contains lists of replaceable parts arranged in the order of the following subassemblies:

P00336400-35 Chassis 7-2
P00336200-5 Front Panel 7-4
P00336300-1 Rear Panel 7-10
P00336600-1 Attenuator 7-11
P00336100-35 Main PCB 7-12

7.2 Manufacturers are identified by FSC numbers listed in Table 7.1, "List of Suppliers". The code numbers are from the Federal Supply Code for Manufacturers Cataloging Handbooks H4-1, H4-2, and their supplements.

Table 7.1-List of Suppliers

FSC	Name
01295	Texas Instruments Inc. Dallas, Texas
02735	RCA Corporation Somerville, New Jersey
04713	Motorola Semiconductor Inc. Phoenix, Arizona
04963	3M Company (Adhesive Coatings & Sealer Division) St. Paul, Minnesota
07263	Fairchild Semiconductor Inc. Mountain View, California
07994	American Radionic Co. Danbury, Connecticut
09023	Cornell-Dubilier Electronics Sanford, North Carolina
21793	Racal-Dana Instruments Inc. Irvine, California
22753	UID Electronics Corp. Hollywood, Florida
27014	National Semiconductor Corp. Santa Clara, California
29604	Stackpole Components Co. Raleigh, North Carolina
50434	Hewlett-Packard Co. Palo Alto, California
53421	Tyton Corp. Milwaukee, Wisconsin
56289	Sprague Electric Co. North Adams, Massachusetts
71590	Centralab Electronics Milwaukee, Wisconsin
75042	International Resistance Co. Philadelphia, Pennsylvania
75915	Littelfuse, Inc. Des Plaines, Illinois
76493	J.W. Miller Co. Compton, California
81349	Military Specification
82389	Switchcraft Inc. Chicago, Illinois
84171	Arco Electronics Great Neck, New York
86884	RCA-Electronic Component Division Harrison, New Jersey
90201	Mallory Capacitor Co. Indianapolis, Indiana
91293	Johanson Manufacturing Co. Boonton, New Jersey

P00336400-35, CHASSIS ASSEMBLY, P25 J

REF. DESIG.	RACAL-DANA P/N	DESCRIPTION	FSC	MFG. P/N
1C903	230275	IC, LINEAR	04713	MC7805CT
Q705	200139	TRANSISTOR, POWER	01295	TIP30
Q706	200131	TRANSISTOR, SILICO, NPN	01295	TIP29
Q754	200139	TRANSISTOR, POWER	01295	TIP30
Q901	230275	IC	04713	MC7805CT
13	P00336100-35	PCB ASSY, MAIN	21793	P00336100-35
21	P00336200-5	ASSY, FRONT PANEL	21793	P00336200-5
25	P00336300-1	ASSY, REAR PANEL	21793	P00335052-1
38	P00335052-1	SIDE RAIL, LH	21793	P00335052-1
39	P00335052-2	SIDE RAIL, RH	21793	P00335052-2
44	P00336065-5	PANEL, FRONT	21793	P00336065-5
45	240000110	GREASE, SILICON, 33	—	—
51	P00336020-1	KNOB, CONCENTRIC (5 REQ'D)	21793	P00336020-1
52	P00336020-2	KNOB, POINTER (5 REQ'D)	21793	P00336020-2
54	P00336020-10	KNOB, SMALL	21793	P00336020-10
55	P00336020-11	KNOB, CONCENTRIC (4 REQ'D)	21793	P00336020-11
67	P00361572-3610	SCREW, PPH, #6 X 5/8 (4 REQ'D)	—	—
69	617102	WASHER, FLAT, #4 (11 REQ'D)	—	—
70	617127	WASHER, LOCK, #4 (11 REQ'D)	—	—
71	P00361572-3405	SCREW, PPH, #4 X 5/16 (4 REQ'D)	—	—
73	615042	SCREW, PPH, 4-40 X .250 (5 REQ'D)	—	—
74	617128	WASHER, LOCK, #6 (6 REQ'D)	—	—
75	203000096	WASHER, FLAT, #6 (6 REQ'D)	—	—

P00336400-35, CHASSIS ASSEMBLY, P25 (Continued) J

REF. DESIG.	RACAL-DANA P/N	DESCRIPTION	FSC	MFG. P/N
79	P311000116	SLEEVING, INSULATION, 12 AWG	—	—
80	240000077	CLAMP, CABLE (3 REQ'D)	—	—
82	P00361572-3406	SCREW, PPH, #4 X 3/8 (6 REQ'D)	—	—
385	P00361572-3606	SCREW, PPH, #6 X 3/8 (2 REQ'D)	—	—

P00336200-5, FRONT PANEL ASSEMBLY, P25 Z

REF. DESIG.	RACAL-DANA P/N	DESCRIPTION	FSC	MFG. P/N
DS1	313000059	LAMP, POWER SWITCH (PART OF S1)	22753	LRSW322N125CL
DS2	312000004	LAMP, TRIGGERED, 28V, 40 MA, GRN	21793	312000004
R1	PR0347680	POT, LEVEL CONTROL, 5K, 1/4 W, 10%	21793	PR0347680
R2	PR0347681	POT, REP RATE VERN, 5K, 1/2 W, 10%	21793	PR0347682
R4	PR0347682	POT, WIDTH VERN, 5K, 10%	21793	PR0347682
R5	PR0347683	POT, RISE/FALL VERN, 50K DUAL	21793	PR0347683
R6	PR0347683	POT, RISE/FALL VERN, 50K DUAL	21793	PR0347683
R10	PR0347923	POT, OFFSET CONTROL, 5K (PART OF S12)	21793	PRO347923
R11	PR0347923	POT, OFFSET CONTROL, 5K (PART OF S13)	21793	PRO347923
R12	PR0347683	POT, RISE/FALL VERN, 50K, DUAL	21793	PR0347683
R13	PR0347683	POT, RISE/FALL VERN, 50K, DUAL	21793	PR0347683
S1	313000059	SWITCH, POWER (INCLUDES DS1)	22753	LRSW322N125CL
S3	PR0347920	SWITCH, MODE	21793	PR0347920
S4	PR0347921	SWITCH	21793	PR347921
S5	PR0347921	SWITCH	21793	PR347921
S6	PR0347921	SWITCH	21793	PR347921
S7	PR0347921	SWITCH	21793	PR347921
S9	313000064	SWITCH	29604	SS-19-1-440THD
S10	313000008	SWITCH, MANUAL TRIGGER	82389	963
S12	PR0347923	SWITCH, OFFSET CONTROL (INCLUDES R10)	21793	PR0347923
S13	PR0347923	SWITCH, OFFSET CONTROL (INCLUDES R11)	21793	PR0347923
1	920504	ADHESIVE, SCOTCH GRIP	04963	4475
10	PR0336067	SUB PANEL	21793	PR0336067

P00336200-5, FRONT PANEL ASSEMBLY, P25 (Continued) Z

REF. DESIG.	RACAL-DANA P/N	DESCRIPTION	FSC	MFG. P/N
15	610777	CABLE TIE (60 REQ'D)	53421	T18R
47	P00336600-1	ASSY, ATTENUATOR	21793	P00336600-1
50	210000045	CONNECTOR, BNC (5 REQ'D)	—	—
51	203000036	WASHER, LOCK, 1/2" TOOTH, 3/8 ID (5 REQ'D)	—	—
52	617016	NUT, HEX, 4-40 (2 REQ'D)	—	—
61	201000028	SCREW, FH, 4-40 X 1/4 (2 REQ'D)	—	—
62	210000063	SCREW, PPH, 4-40 X 3/16 (2 REQ'D)	—	—
63	617102	WASHER, FLAT, #4, LIGHT SERIES (2 REQ'D)	—	—
64	617127	WASHER, LOCK, #4, LIGHT SERIES (2 REQ'D)	—	—
65	202000014	NUT, DECORATIVE	—	—
66	203000009	WASHER, FLAT, 3/8 ID X .063 (14 REQ'D)	—	—
67	203000051	WASHER, 3/8" EXT. LOCK, CAD (19 REQ'D)	—	—
69	215000014	LUG, TERMINAL (5 REQ'D)	—	—
70	P00360102-3172	WIRE, 22 AWG, RED, 17.5 IN.	—	—
71	P00360103-3072	WIRE, 22 AWG, ORN, 7.5 IN.	—	—
72	P00360103-3160	WIRE, 22 AWG, ORN, 16.0 IN.	—	—
74	PR0360105-3123	WIRE, 22 GA, GRN, 12.75 IN (2 REQ'D)	—	—
75	P00360107-3041	WIRE, 22 AWG, V10, 4.25 IN.	—	—
76	P00360100-3131	WIRE, TEF. STR, 22 GA, BLK, 13.25 IN	—	—
77	P00360106-3062	WIRE, 22 AWG, BLU, 6.5 IN.	—	—
78	P00360101-3052	WIRE, 22 AWG, BRN, 5.5 IN.	—	—

P00336200-5, FRONT PANEL ASSEMBLY, P25 (Continued) Z

REF. DESIG.	RACAL-DANA P/N	DESCRIPTION	FSC	MFG. P/N
79	P00360104-3180	WIRE, TEF. STR, 22 GA, YEL, 18.0 IN.	—	—
81	P00360100-3033	WIRE, 22 AWG, BLK, 3.75 IN.	—	—
82	P00360200-1123	CABLE, COAX 12.75 IN (5 REQ'D)	—	—
83	P00360105-3143	WIRE, TEF. STR, 22 GA, GRN, 14.75 IN	—	—
84	P00360101-3110	WIRE, TEF. STR, 22 GA, BRN, 11.0 IN	—	—
85	P00360100-3110	WIRE, TEF. STR, 22 GA, BLK, 11.0 IN	—	—
86	P00360107-3090	WIRE, 22 AWG, V10, 9.0 IN.	—	—
87	P00360106-3092	WIRE, 22 AWG, BLU, 9.5 IN.	—	—
88	P00360100-3113	WIRE, 22 AWG, BLK, 11.75 IN.	—	—
90	PR0360104-3082	WIRE, 22 GA, YEL, 8.5 IN (2 REQ'D)	—	—
91	P00360102-3092	WIRE, 22 AWG, RED, 9.5 IN.	—	—
92	P00360104-3092	WIRE, 22 AWG, YEL, 9.5 IN.	—	—
93	P00360106-3093	WIRE, 22 AWG, BLU, 9.75 IN.	—	—
95	P00360200-1071	CABLE, COAX, 7.25 IN.	—	—
96	P00360200-1113	CABLE, COAX, 11.75 IN.	—	—
97	P00360200-1150	CABLE, COAX, 15.0 IN.	—	—
99	P00360103-3190	WIRE, TEF. STR, 22 GA, ORN, 19.0 IN	—	—
100	P00360105-3171	WIRE, 22 AWG, GRN, 17.25 IN.	—	—
102	P00360101-3171	WIRE, 22 AWG, BRN, 17.25 IN.	—	—
104	P00360104-3160	WIRE, 22 AWG, YEL, 16.0 IN.	—	—
105	P00360100-3142	WIRE, 22 AWG, BLK, 14.5 IN.	—	—
106	P00360107-3150	WIRE, 22 AWG, V10, 15.0 IN. (2 REQ'D)	—	—

P00336200-5, FRONT PANEL ASSEMBLY, P25 (Continued) Z

REF. DESIG.	RACAL-DANA P/N	DESCRIPTION	FSC	MFG. P/N
107	P00360107-3192	WIRE, 22 AWG, V10, 19.5 IN.	—	—
109	P00360109-3190	WIRE, 22 AWG, WHT, 19.0 IN.	—	—
111	P00360100-3230	WIRE, 22 AWG, BLK, 23.0 IN.	—	—
112	P00360101-3202	WIRE, 22 AWG, BRN, 20.5 IN.	—	—
113	P00360103-3250	WIRE, TEF. STR, 22 GA, ORN, 25.0 IN	—	—
114	P00360106-3202	WIRE, TEF. STR, 22 GA, BLU, 20.5 IN	—	—
115	P00360100-3170	WIRE, 22 AWG, BLK, 17.0 IN.	—	—
116	P00360104-3162	WIRE, 22 AWG, YEL, 16.5 IN.	—	—
117	P00360105-3162	WIRE, 22 AWG, GRN, 16.5 IN.	—	—
118	P00360107-3160	WIRE, 22 AWG, V10, 16.0 IN.	—	—
119	P00360108-3153	WIRE, 22 AWG, GRY, 15.75 IN.	—	—
120	P00360102-3150	WIRE, 22 AWG, RED, 15.0 IN.	—	—
121	P00360103-3153	WIRE, 22 AWG, ORN, 15.75 IN.	—	—
122	P00360101-3190	WIRE, TEF. STR, 22 GA, BRN, 19.25 IN	—	—
123	P00360106-3152	WIRE, TEF. STR, 22 GA, BLU, 15.5 IN	—	—
124	PR0360109-3152	WIRE, 22 GA, WHT, 15.5 IN (2 REQ'D)	—	—
126	P00360106-3172	WIRE, TEF. STR, 22 GA, BLU, 17.5 IN	—	—
127	P00360200-1022	CABLE, COAX, 2.5 IN.	—	—
130	P00360106-3060	WIRE, TEF. STR, 22 GA, BLU, 6.0 IN	—	—
131	PR0360105-3042	WIRE, 22 GA, GRN, 4.5 IN (3 REQ'D)	—	—

P00336200-5, FRONT PANEL ASSEMBLY, P25 (Continued) Z

REF. DESIG.	RACAL-DANA P/N	DESCRIPTION	FSC	MFG. P/N
132	P00360102-3050	WIRE, 22 AWG, RED, 5.0 IN.	—	—
133	PR0360100-3022	WIRE, 22 GA, BLK, 2.5 IN (2 REQ'D)	—	—
136	P00360106-3162	WIRE, 22 AWG, BLU, 16.5 IN.	—	—
137	P00360102-3090	WIRE, 22 AWG, RED, 9.0 IN.	—	—
139	P00360107-3181	WIRE, TEF. STR, 22 GA, VIO, 18.25 IN	—	—
141	P00360109-3181	WIRE, 22 AWG, WHT, 18.25 IN.	—	—
142	311000116	SLEEVING, INSULATION, 12 AWG	—	—
143	311000122	SLEEVING, 22 AWG, TEFLON	—	—
144	500022	BUSS WIRE, 22 GA (2 REQ'D)	21793	500022
168	P00360101-3080	WIRE, TEF. STR, 22 GA, BRN, 8.0 IN	—	—
301	P00360100-3021	WIRE, TEF. STR, 22 GA, BLK, 2.25 IN (4 REQ'D)	—	—
302	P00360102-3040	WIRE, TEF. STR, 22 GA, RED, 4.0 IN (2 REQ'D)	—	—
303	P00360107-3020	WIRE, TEF. STR, 22 GA, VIO, 2.0 IN	—	—
304	P00360107-3042	WIRE, TEF. STR, 22 GA, VIO, 4.5 IN	—	—
306	P00360104-3032	WIRE, TEF. STR, 22 GA, YEL, 3.5 IN (2 REQ'D)	—	—
307	P00360105-3023	WIRE, TEF. STR, 22 GA, GRN, 2.75 IN	—	—
308	P00360109-3023	WIRE, TEF. STR, 22 GA, WHT, 2.75 IN	—	—
309	P00360109-3031	WIRE, TEF. STR, 22 GA, WHT, 3.25 IN	—	—
310	P00360108-3040	WIRE, TEF. STR, 22 GA, GRY, 4.0 IN	—	—
311	P00360108-3032	WIRE, TEF. STR, 22 GA, GRY, 3.5 IN	—	—
312	P00360106-3040	WIRE, TEF. STR, 22 GA, GRY, 4.0 IN	—	—

P00336200-5, FRONT PANEL ASSEMBLY, P25 (Continued) Z

REF. DESIG.	RACAL-DANA P/N	DESCRIPTION	FSC	MFG. P/N
313	P00360106-3021	WIRE, TEF. STR, 22 GA, GRY, 2.25 IN	—	—
314	P00360103-3030	WIRE, TEF. STR, 22 GA, ORN, 3.0 IN	—	—
320	P00360100-3032	WIRE, TEF. STR, 22 GA, BLK, 3.5 IN	—	—
323	P00360109-3020	WIRE, TEF. STR, 22 GA, WHT, 2.0 IN	—	—

P00336300-1, REAR PANEL ASSEMBLY, P25 P

REF. DESIG.	RACAL-DANA P/N	DESCRIPTION	FSC	MFG. P/N
F1	920205	FUSE, GLASS, .75A, 250V	75915	3AG3/4ASB
S2	P00347926	SWITCH, POWER SELECT	21793	P00347926
T1	PR0347801	TRANSFORMER	21793	PR0347801
3	PR0336059	HEATSINK (2 REQ'D)	—	—
4	PR0336361	PANEL, REAR	21793	PR0336361
5	308000026	FUSE HOLDER, 3 AG	—	—
6	311000100	CABLE, SP, ELEC, 3-CONDS.	—	—
8	240000046	BUSHING, STRAIN RELIEF	—	—
19	311000125	SLEEVING, INSUL, 7/16, DIA-VINYL	—	—
20	311000116	SLEEVING, INSUL, 12 AWG	—	—
26	201000072	SCREW, PPH, 6-32 X 5/16 (2 REQ'D)	—	—
27	201000074	SCREW, PPH, 6-32 X 7/16 (4 REQ'D)	—	—
28	617128	WASHER, LOCK, #6 (6 REQ'D)	—	—
29	203000096	WASHER, FLAT, #6 (6 REQ'D)	—	—
30	617005	NUT, HEX, 6-32 (4 REQ'D)	—	—
31	215000011	LUG, SOLDER (1410-8)	—	—
32	P00360109-3030	WIRE, 22 AWG, WHT, 3.0 IN.	—	—
34	P00360109-3020	WIRE, 22 AWG, WHT, 2.0 IN.	—	—
35	P00360109-3022	WIRE, 22 AWG, SHT, 2.5 IN.	—	—
367	201000019	SCREW, PPH, #8-32 X 2 (4 REQ'D)	—	—
368	202000018	NUT, HEX, #8-32 (4 REQ'D)	—	—
592	203000050	WASHER, LOCK, SPR #8 CRES (4 REQ'D)	—	—

P00336600-1, ATTENUATOR, P25 L

REF. DESIG.	RACAL-DANA P/N	DESCRIPTION	FSC	MFG. P/N
R51	302000349	RES, METAL GLAZE, 33 OHM, 1W, 5%	75042	RG32-330J
R52	302000259	RES, METAL GLAZE, 20 OHM, 1W, 5%	75042	RG32-200J
R54	302000350	RES, METAL GLAZE, 33 OHM, 2W, 5%	75042	RG42-330J
R55	302000465	RES, METAL GLAZE, 51 OHM, 2W, 5%	75042	RG42-510J
R56	302000465	RES, METAL GLAZE, 51 OHM, 2W, 5%	75042	RG42-510J
R57	PR0347684	RES, VARIABLE, BRIDGET PAD	21793	PR0347684
S51	PR0347925	SWITCH, POLARITY	21793	PR0347925
20	311000503	WIRE, ELECTRICAL, 20 AWG	—	—
21	501376	TUBING, STD, TEFLON, .036ID, CLR	—	—
25	PR0336066	COUPLING, SLEEVE	—	—
26	PR0336064	SHAFT, GLASS	—	—
27	P00360105-3042	WIRE, 22 AWG, GRN, 4.5 IN.	—	—
28	P00360107-3060	WIRE, 22 AWG, V10, 6.0 IN.	—	—
29	P00360103-3180	WIRE, 22 AWG, ORG, 18.0 IN.	—	—
30	P00360106-3182	WIRE, 22 AWG, BLU, 18.5 IN.	—	—
31	P00360200-1041	CABLE, COAX, SHIELDED	—	—
33	P00360200-1033	CABLE, COAX, 3.75 IN.	—	—
34	P00360200-1021	CABLE, COAX, 2.25 IN.	—	—
37	610615	WASHER, .203 ID, .438 OD	—	—
38	P00360200-1070	CABLE, COAX, SHIELDED	—	—
39	920008	CEMENT	—	—

P00336100-35, MAIN PCB ASSEMBLY, P25 AA

REF. DESIG.	RACAL-DANA P/N	DESCRIPTION	FSC	MFG. P/N
C102	307000152	CAP, ELECT, 22 MF, 10V, 10%	56289	196D226X901KA1
C103	307000047	CAP, FILM, .22 MF, 100V, 10%	56289	C280MAH/A220K
C104	307000100	CAP, FILM, .0022 MF, 80V, 10%	56289	192P2229R8
C107	P00347713-1	CAP, CERAM, .01 MF, 100V, 20%	56289	C023A101F103M
C108	307000171	CAP, MICA, 33 PF, 500V, 5%	84171	CM05ED-330J
C109	P00347713-1	CAP, CERAM, .01 MF, 100V, 20%	56289	C023A101F103M
C110	110001	CAP, TANTA, 6.8 MF, 35V, 10%	56289	196D685X0035KA1
C111	P00347713-1	CAP, CERAM, .01 MF, 100V, 20%	56289	C023A101F103M
C112	P00347713-1	CAP, CERAM, .01 MF, 100V, 20%	56289	C023A101F103M
C113	P00347713-1	CAP, CERAM, .01 MF, 100V, 20%	56289	C023A101F103M
C114	P00347713-1	CAP, CERAM, .01 MF, 100V, 20%	56289	C023A101F103M
C115	110001	CAP, TANTA, 6.8 MF, 35V, 10%	56289	196D685X0035KA1
C116	P003477136-1	CAP, CERAM, .01 MF, 100V, 20%	56289	C023A101F103M
C117	307000267	CAP, ELECT, 47 MF, 6V, 5%	56289	196D476X9006KA1
C119	P00347713-1	CAP, CERAM, .01 MF, 100V, 20%	56289	C023A101F103M
C120	110001	CAP, TANTA, 6.8 MF, 35V, 10%	56289	196D685X0035KA1
C121	P00347713-1	CAP, CERAM, .01 MF, 100V, 20%	56289	C023A101F103M
C122	P00347713-1	CAP, CERAM, .01 MF, 100V, 20%	56289	C023A101F103M
C123	110001	CAP, TANTA, 6.8 MF, 35V, 10%	56289	196D685X0035KA1
C124	110001	CAP, TANTA, 6.8 MF, 35V, 10%	56289	196D685X0035KA1
C125	110001	CAP, TANTA, 6.8 MF, 35V, 10%	56289	196D685X0035KA1
C202	307000069	CAP, VARIABLE, 2.3-20 PF, 250V	91293	9302
C203	307000101	CAP, FILM, .0047 MF, 80V, 10%	56289	192P4729R8
C204	307000018	CAP, FILM, .47 MF, 100V, 10%	56289	C280MAH/A470K

P00336100-35, MAIN PCB ASSEMBLY, P25 (Continued) AA

REF. DESIG.	RACAL-DANA P/N	DESCRIPTION	FSC	MFG. P/N
C205	307000267	CAP, ELECT, 47 MF, 6V, 5%	56289	196D476X9006KA1
C206	P00347721	CAP, DIP MYLAR, .1 MF, 100V, 40%	07994	FM0104U
C207	P00347713-1	CAP, CERAM, .01 MF, 100V, 20%	56289	C023A101F103M
C208	P00347721	CAP, DIP MYLAR, .1 MF, 100V, 40%	07994	FM0104U
C209	P00347713-1	CAP, CERAM, .01 MF, 100V, 20%	56289	C023A101F103M
C210	P00347713-1	CAP, CERAM, .01 MF, 100V, 20%	56289	C023A101F103M
C211	307000069	CAP, VARIABLE, 2.3-20 PF, 250V	91293	9302
C212	P00347713-1	CAP, CERAM, .01 MF, 100V, 20%	56289	C023A101F103M
C213	P00347713-1	CAP, CERAM, .01 MF, 100V, 20%	56289	C023A101F103M
C214	P00347713-1	CAP, CERAM, .01 MF, 100V, 20%	56289	C023A101F103M
C216	P00347713-1	CAP, CERAM, .01 MF, 100V, 20%	56289	C023A101F103M
C219	P00347713-1	CAP, CERAM, .01 MF, 100V, 20%	56289	C023A101F103M
C302	307000069	CAP, VARIABLE, 2.0-20 PF, 250V	91293	9302
C303	307000101	CAP, FILM, .0047 MF, 80V, 10%	56289	192P4729R8
C304	304000018	CAP, FILM, .47 MF, 100V, 10%	56289	C280MAH/A470K
C305	307000267	CAP, ELECT, 47 MF, 6V, 5%	56289	196D476X9006KA1
C306	P00347721	CAP, DIP MYLAR, .1 MF, 100V, 40%	07994	FM0104U
C307	P00347713-1	CAP, CERAM, .01 MF, 100V, 20%	56289	C023A101F103M
C308	P00347721	CAP, DIP MYLAR, .1 MF, 100V, 40%	07994	FM0104U
C309	307000070	CAP, VARIABLE, 3.8-30 PF, 250V	91293	9303
C310	P00347713-1	CAP, CERAM, .01 MF, 100V, 20%	56289	C023A101F103M
C311	P00347713-1	CAP, CERAM, .01 MF, 100V, 20%	56289	C023A101F103M
C313	P00347713-1	CAP, CERAM, .01 MF, 100V, 20%	56289	C023A101F103M
C314	P00347713-1	CAP, CERAM, .01 MF, 100V, 20%	56289	C023A101F103M

P00336100-35, MAIN PCB ASSEMBLY, P25 (Continued) AA

REF. DESIG.	RACAL-DANA P/N	DESCRIPTION	FSC	MFG. P/N
C315	307000070	CAP, VARIABLE , 3.8-30 PF, 250V	91293	9303
C317	P00347713-1	CAP, CERAM, .01 MF, 100V, 20%	56289	C023A101F103M
C318	P00347713-1	CAP, CERAM, .01 MF, 100V, 20%	56289	C023A101F103M
C401	P00347713-1	CAP, CERAM, .01 MF, 100V, 20%	56289	C023A101F103M
C402	P00347721	CAP, DIP MYLAR, .1 MF, 100V, 40%	07994	FM0104U
C403	P00347713-1	CAP, CERAM, .01 MF, 100V, 20%	56289	C023A101F103M
C404	P00347713-1	CAP, CERAM, .01 MF, 100V, 20%	56289	C023A101F103M
C405	307000047	CAP, MICA, 20 PF, 500V, 10%	71590	CM05ED-200J
C501	100100	CAP, FSV	21793	100100
C502	307000101	CAP, FILM, .0047 MF, 80V, 40%	71590	192P4729R8
C503	304000018	CAP, FILM, .47 MF, 100V, 10%	71590	C280MAH/A470K
C505	P00347713-1	CAP, CERAM, .01 MF, 100V, 20%	56289	C023A101F103M
C508	130066	CAP, MICA, 100 PF, 500V, 5%	09023	C015FD101J03
C509	130066	CAP, MICA, 100 PF, 500V, 5%	09023	C015FD101J03
C510	307000118	CAP, MICA, 10 PF, 500V, 5%	84171	CM05ED-100J
C511	307000118	CAP, MICA, 10 PF, 500V, 5%	84171	CM05ED-100J
C512	P00347713-1	CAP, CERAM, .01 MF, 100V, 20%	56289	C023A101F103M
C513	110001	CAP, TANTA, 6.8 MF, 35V, 10%	56289	196D685X0035KA1
C515	110001	CAP, TANTA, 6.8 MF, 35V, 10%	56289	196D685X0035KA1
C516	110001	CAP, TANTA, 6.8 MF, 35V, 10%	56289	196D685X0035KA1
C517	P00347713-1	CAP, CERAM, .01 MF, 100V, 20%	56289	C023A101F103M
C518	P00347713-1	CAP, CERAM, .01 MF, 100V, 20%	56289	C023A101F103M
C519	P00347713-1	CAP, CERAM, .01 MF, 100V, 20%	56289	C023A101F103M
C520	110001	CAP, TANTA, 6.8 MF, 35V, 10%	56289	196D685X0035KA1

P00336100-35, MAIN PCB ASSEMBLY, P25 (Continued) AA

REF. DESIG.	RACAL-DANA P/N	DESCRIPTION	FSC	MFG. P/N
C521	110001	CAP, TANTA, 6.8 MF, 35V, 10%	56289	196D685X0035KA1
C522	110001	CAP, TANTA, 6.8 MF, 35V, 10%	56289	196D685X0035KA1
C523	307000172	CAP, ELECT, 33 MF, 6V, 10%	56289	196D336X9006KA1
C524	307000174	CAP, MICA, 360 PF, 500V, 5%	84171	CM05ED-361J
C525	P00347713-1	CAP, CERAM, .01 MF, 100V, 20%	56289	C023A101F103M
C526	P00347713-1	CAP, CERAM, .01 MF, 100V, 20%	56289	C023A101F103M
C527	307000174	CAP, MICA, 360 PF, 500V, 5%	84171	CM05ED-361J
C528	P00347713-1	CAP, CERAM, .01 MF, 100V, 20%	56289	C023A101F103M
C530	P00347713-1	CAP, CERAM, .01 MF, 100V, 20%	56289	C023A101F103M
C531	P00347713-1	CAP, CERAM, .01 MF, 100V, 20%	56289	C023A101F103M
C551	P00347713-1	CAP, CERAM, .01 MF, 100V, 20%	56289	C023A101F103M
C552	110001	CAP, TANTA,6.8 MF, 35V, 10%	56289	196D685X0035KA1
C554	100100	CAP, FSV	21793	100100
C555	P00347713-1	CAP, CERAM, .01 MF, 100V, 20%	56289	C023A101F103M
C556	110001	CAP, TANTA, 6.8 MF, 35V, 10%	56289	196D685X0035KA1
C557	100100	CAP, FSV	21793	100100
C558	P00347721	CAP, DIP MYLAR, .1 MF, 100V, 40%	07994	FM0104U
C560	P00347713-1	CAP, CERAM, .01 MF, 100V, 20%	56289	C023A101F103M
C561	P00347713-1	CAP, CERAM, .01 MF, 100V, 20%	56289	C023A101F103M
C562	P00347713-1	CAP, CERAM, .01 MF, 100V, 20%	56289	C023A101F103M
C563	P00347721	CAP, DIP MYLAR, .1 MF, 100V, 40%	07994	FM0104U
C564	307000268	CAP, ELECT, 50 MF, 25V, -10% + 100%	90201	MTV50CD25
C565	110001	CAP, TANTA, 6.8 MF, 35V, 10%	56289	196D685X0035KA1
C566	P00347721	CAP, DIP MYLAR, .1 MF, 100V, 40%	07994	FM0104U

P00336100-35, MAIN PCB ASSEMBLY, P25 (Continued) AA

REF. DESIG.	RACAL-DANA P/N	DESCRIPTION	FSC	MFG. P/N
C567	P00347721	CAP, DIP MYLAR, .1 MF, 100V, 40%	07994	FM0104U
C570	110001	CAP, TANTA, 6.8 MF, 35V, 10%	56289	196D685X0035KA1
C575	100100	CAP, FSV	21793	100100
C576	P00347713-1	CAP, CERAM, .01 MF, 100V, 20%	56289	C023A101F103M
C577	P00347713-1	CAP, CERAM, .01 MF, 100V, 20%	56289	C023A101F103M
C580	304000101	CAP, FILM, .0047 MF, 80V, 10%	56289	192P4729R8
C581	130066	CAP, MICA, 100 PF, 500V, 5%	09023	C015FD101J03
C582	P00347713-1	CAP, CERAM, .01 MF, 100V, 20%	56289	C023A101F103M
C601	100100	CAP, FSV	21793	100100
C602	304000101	CAP, FILM, .0047 MF, 80V, 10%	56289	192P4729R8
C603	304000018	CAP, FILM, .47 MF, 100V, 10%	56289	C280MAH.A470K
C604	307000188	CAP, ELECT, 47 MF, J20V, 10%	56289	196D476X9020LA3
C605	307000118	CAP, MICA, 10 PF, 500V, 5%	84171	CM05ED-100J
C608	130066	CAP, MICA, 100 PF, 500V, 5%	09023	C015FD101J03
C609	130066	CAP, MICA, 100 PF, 500V, 5%	09023	C015FD101J03
C610	307000118	CAP, MICA, 10 PF, 500V, 5%	84171	CM05ED-100J
C611	307000118	CAP, MICA, 10 PF, 500V, 5%	84171	CM05ED-100J
C612	P00347713-1	CAP, CERAM, .01 MF, 100V, 20%	56289	C023A101F103M
C613	110001	CAP, TANTA, 6.8 MF, 35V, 10%	56289	196D685X0035KA1
C615	110001	CAP, TANTA, 6.8 MF, 35V, 10%	56289	196D685X0035KA1
C616	110001	CAP, TANTA, 6.8 MF, 35V, 10%	56289	196D685X0035KA1
C617	P00347713-1	CAP, CERAM, .01 MF, 100V, 20%	56289	C023A101F103M
C618	P00347713-1	CAP, CERAM, .01 MF, 100V, 20%	56289	C023A101F103M
C619	P00347713-1	CAP, CERAM, .01 MF, 100V, 20%	56289	C023A101F103M

P00336100-35, MAIN PCB ASSEMBLY, P25 (Continued) AA

REF. DESIG.	RACAL-DANA P/N	DESCRIPTION	FSC	MFG. P/N
C620	110001	CAP, TANTA, 6.8 MF, 35V, 10%	56289	196D685X0035KA1
C621	110001	CAP, TANTA, 6.8 MF, 35V, 10%	56289	196D685X0035KA1
C622	110001	CAP, TANTA, 6.8 MF, 35V, 10%	56289	196D685X0035KA1
C623	307000172	CAP, ELECT, 33 MF, 6V, 10%	56289	196D336X9006KA1
C624	307000174	CAP, MICA, 360 PF, 500V, 5%	84171	CM05ED-361J
C625	P00347713-1	CAP, CERAM, .01 MF, 100V, 20%	56289	C023A101F103M
C626	P00347713-1	CAP, CERAM, .01 MF, 100V, 20%	56289	C023A101F103M
C627	307000174	CAP, MICA, 360 PF, 500V, 5%	84171	CM05ED-361J
C628	P00347713-1	CAP, CERAM, .01 MF, 100V, 20%	56289	C023A101F103M
C651	P00347713-1	CAP, CERAM, .01 MF, 100V, 20%	56289	C023A101F103M
C652	110001	CAP, TANTA, 6.8 MF, 35V, 10%	56289	196D685X0035KA1
C654	100100	CAP, FSV	21793	100100
C655	P00347713-1	CAP, CERAM, .01 MF, 100V, 20%	56289	C023A101F103M
C656	110001	CAP, TANTA, 6.8 MF, 35V, 10%	56289	196D685X0035KA1
C657	100100	CAP, FSV	21793	100100
C658	P00347721	CAP, DIP MYLAR, .1 MF, 100V, 40%	07994	FM0104U
C660	P00347713-1	CAP, CERAM, .01 MF, 100V, 20%	56289	C023A101F103M
C661	P00347713-1	CAP, CERAM, .01 MF, 100V, 20%	56289	C023A101F103M
C662	P00347713-1	CAP, CERAM, .01 MF, 100V, 20%	56289	C023A101F103M
C663	P00347721	CAP, DIP MYLAR, .1 MF, 100V, 40%	07994	FM0104U
C664	307000268	CAP, ELECT, 50 MF, 25V, -10% +100%	90201	MTV50DC25
C665	110001	CAP, TANTA, 6.8 MF, 35V, 10%	56289	196D685X0035KA1
C666	P00347721	CAP, DIP MYLAR, .1 MF, 100V, 40%	07994	FM0104U
C667	P00347721	CAP, DIP MYLAR, .1 MF, 100V, 40%	07994	FM0104U

P00336100-35, MAIN PCB ASSEMBLY, P25 (Continued) AA

REF. DESIG.	RACAL-DANA P/N	DESCRIPTION	FSC	MFG. P/N
C670	110001	CAP, TANTA, 6.8 MF, 35V, 10%	56289	196D685X0035KA1
C675	100100	CAP, FSV	21793	100100
C676	P00347713-1	CAP, CERAM, .01 MF, 100V, 20%	56289	C023A101F103M
C677	P00347713-1	CAP, CERAM, .01 MF, 100V, 20%	56289	C023A101F103M
C680	304000101	CAP, FILM, .0047 MF, 80V, 10%	56289	192P4729R8
C681	130066	CAP, MICA, 100 PF, 500V, 5%	09023	C015FD101J03
C701	P00347721	CAP, DIP MYLAR, .1 MF, 100V, 40%	07994	FM0104U
C702	P00347721	CAP, DIP MYLAR, .1 MF, 100V, 40%	07994	FM0104U
C751	P00347721	CAP, DIP MYLAR, .1 MF, 100V, 40%	07994	FM0104U
C752	P00347721	CAP, DIP MYLAR, .1 MF, 100V, 40%	07994	FM0104U
C801	P00347713-1	CAP, CERAM, .01 MF, 100V, 20%	56289	C023A101F103M
C802	P00347713-1	CAP, CERAM, .01 MF, 100V, 20%	56289	C023A101F103M
C804	P00347713-1	CAP, CERAM, .01 MF, 100V, 20%	56289	C023A101F103M
C806	P00347713-1	CAP, CERAM, .01 MF, 100V, 20%	56289	C023A101F103M
C807	P00347713-1	CAP, CERAM, .01 MF, 100V, 20%	56289	C023A101F103M
C808	P00347713-1	CAP, CERAM, .01 MF, 100V, 20%	56289	C023A101F103M
C809	100071	CAP, CERAM, .001 MF, 1000V, 20%	56289	C023B102E102M
C810	P00347713-1	CAP, CERAM, .01 MF, 100V, 20%	56289	C023A101F103M
C811	P00347713-1	CAP, CERAM, .01 MF, 100V, 20%	56289	C023A101F103M
C812	P00347713-1	CAP, CERAM, .01 MF, 100V, 20%	56289	C023A101F103M
C813	P00347713-1	CAP, CERAM, .01 MF, 100V, 20%	56289	C023A101F103M
C814	307000197	CAP, MICA, 51 PF, 500V, 5%	84171	CM05ED-510K
C815	307000268	CAP, ELECT, 50 MF, 25V, -10% +100%	90201	MTV50DC25
C816	P00347713-1	CAP, CERAM, .01 MF, 100V, 20%	56289	C023A101F103M

P00336100-35, MAIN PCB ASSEMBLY, P25 (Continued) AA

REF. DESIG.	RACAL-DANA P/N	DESCRIPTION	FSC	MFG. P/N
C817	P00347713-1	CAP, CERAM, .01 MF, 100V, 20%	56289	C023A101F103M
C818	P00347713-1	CAP, CERAM, .01 MF, 100V, 20%	56289	C023A101F103M
C819	P00347713-1	CAP, CERAM, .01 MF, 100V, 20%	56289	C023A101F103M
C820	P00347713-1	CAP, CERAM, .01 MF, 100V, 20%	56289	C023A101F103M
C821	P00347713-1	CAP, CERAM, .01 MF, 100V, 20%	56289	C023A101F103M
C901	P00347700	CAP, ELECT, 2500 MF, 35V, -10% +150%	21793	P00347700
C902	P00347700	CAP, ELECT, 2500 MF, 35V, -10% +150%	21793	P00347700
C903	P00347700	CAP, ELECT, 2500 MF, 35V, -10% +150%	21793	P00347700
C904	P00347704	CAP, ELECT, 100 MF, 50V, 10%	90201	MTV100DN50
C905	P00347713-1	CAP, CERAM, .01 MF, 100V, 20%	56289	C023A101F103M
C906	P00347713-1	CAP, CERAM, .01 MF, 100V, 20%	56289	C023A101F103M
C907	P00347704	CAP, ELECT, 100 MF, 50V, 10%	90201	MTV100DN50
C908	307000005	CAP, ELECT, 100 MF, 15V, 10%	90201	20-44823
C911	P00347700	CAP, ELECT, 2500 MF, 35V, -10% +150%	21793	P00347700
C912	P00347700	CAP, ELECT, 2500 MF, 35V, -10% +150%	21793	P00347700
C913	110001	CAP, TANTA, 6.8 MF, 35V, 10%	56289	196D685X0035KA1
CR101	211083	DIODE, SILICO	81349	1N916B
CR102	210089	DIODE, LOW OFFSET SCHOTTKY	50434	HP5082-2835
CR201	304000007	DIODE, SILICO	01295	1N4153
CR202	304000007	DIODE, SILICO	01295	1N4153
CR203	304000007	DIODE, SILICO	01295	1N4153
CR204	211083	DIODE, SILICO	81349	1N916B
CR301	304000007	DIODE, SILICO	01295	1N4153
CR302	304000007	DIODE, SILICO	01295	1N4153

P00336100-35, MAIN PCB ASSEMBLY, P25 (Continued) AA

REF. DESIG.	RACAL-DANA P/N	DESCRIPTION	FSC	MFG. P/N
CR303	304000007	DIODE, SILICO	01295	1N4153
CR305	210089	DIODE, LOW OFFSET SCHOOTKY	50434	HP5082-3835
CR306	210089	DIODE, LOW OFFSET SCHOOTKY	50434	HP5082-3835
CR308	211083	DIODE, SILICO	81349	1N916B
CR309	211083	DIODE, SILICO	81349	1N916B
CR401	307000007	DIODE, SILICO	01295	1N4153
CR402	211083	DIODE, SILICO	81349	1N916B
CR403	211083	DIODE, SILICO	81349	1N916B
CR404	211083	DIODE, SILICO	81349	1N916B
CR405	211083	DIODE, SILICO	81349	1N916B
CR501	211083	DIODE, SILICO	81349	1N916B
CR502	211083	DIODE, SILICO	81349	1N916B
CR503	210089	DIODE, LOW OFFSET SCHOTTKY	50434	HP5082-2835
CR504	211083	DIODE, SILICO	81349	1N916B
CR552	211083	DIODE, SILICO	81349	1N916B
CR555	304000007	DIODE, SILICO	01295	1N4153
CR601	211083	DIODE, SILICO	81349	1N916B
CR602	211083	DIODE, SILICO	81349	1N916B
CR603	210089	DIODE, LOW OFFSET SCHOTTKY	50434	HP5082-2835
CR652	211083	DIODE, SILICO	81349	1N916B
CR655	304000007	DIODE, SILICO	01295	1N4153
CR801	304000007	DIODE, SILICO	01295	1N4153
CR802	304000007	DIODE, SILICO	01295	1N4153
CR803	304000007	DIODE, SILICO	01295	1N4153

P00336100-35, MAIN PCB ASSEMBLY, P25 (Continued) AA

REF. DESIG.	RACAL-DANA P/N	DESCRIPTION	FSC	MFG. P/N
CR804	304000007	DIODE, SILICO	01295	1N4153
CR805	211083	DIODE, SILICO	81349	1N916B
CR806	304000007	DIODE, SILICO	01295	1N4153
CR807	304000007	DIODE, SILICO	01295	1N4153
CR808	304000007	DIODE, SILICO	01295	1N4153
CR809	211083	DIODE, SILICO	81349	1N916B
CR810	211083	DIODE, SILICO	81349	1N916B
CR811	307000007	DIODE, SILICO	01295	1N4153
CR812	307000007	DIODE, SILICO	01295	1N4153
CR813	211083	DIODE, SILICO	81349	1N916B
CR901	210070	DIODE, POWER, 3 AMP	04713	MR501
CR902	210070	DIODE, POWER, 3 AMP	04713	MR501
CR903	210070	DIODE, POWER, 3 AMP	04713	MR501
CR904	210070	DIODE, POWER, 3 AMP	04713	MR501
CR905	304000005	DIODE, SILICO	04713	1N4002
CR906	304000005	DIODE, SILICO	04713	1N4002
IC101	305000312	IC, 741 8-PIN DIP	01295	SN72741P
IC103	230118	IC, 3086 14-PIN DIP	86884	CA3086
IC302	P00347428	IC, 14-PIN DIP	01295	74S00N
IC502	P00347428	IC, 14-PIN DIP	01295	74S00N
IC801	P00347428	IC, 14-PIN DIP	01295	74S00N
IC802	230589	IC, NAND GATE	27014	74S00
IC803	230589	IC, NAND GATE	27014	74S00
IC804	230028	IC, 7400, 14-PIN DIP	01295	SN7400N

P00336100-35, MAIN PCB ASSEMBLY, P25 (Continued) AA

REF. DESIG.	RACAL-DANA P/N	DESCRIPTION	FSC	MFG. P/N
IC901	305000312	IC, 741, 8-PIN DIP	01295	SN72741P
IC902	305000312	IC, 741, 8-PIN DIP	01295	SN72741P
L201	309000016	CHOKE, 150 NH	76493	9310-00
L301	309000016	CHOKE, 150 NH	76493	9310-00
L501	309000004	CHOKE, 51 MH	76493	9210-62
L601	309000004	CHOKE, 51 MH	76493	9210-62
L701	309000017	CHOKE, 3.3. MH	76493	73F333AF
L702	309000017	CHOKE, 3.3. MH	76493	73F333AF
L703	309000019	CHOKE, 820 MH	76493	9350-30
L704	309000018	CHOKE, 10 MH	76493	9310-36
L705	309000010	CHOKE	76493	9310-36
L751	309000017	CHOKE, 3.3 MH	76493	73F333AF
L752	309000017	CHOKE, 3.3 MH	76493	73F333AF
L753	309000019	CHOKE, 820 MH	76493	9350-30
L754	309000018	CHOKE, 10 MH	76493	9310-36
L755	309000010	CHOKE	76493	9310-36
Q101	P00347102	TRANSISTOR, SILICO, PNP	04713	2N3906
Q102	303000033	TRANSISTOR, SILICO, NPN	07263	2N5770
Q103	303000033	TRANSISTOR, SILICO, NPN	07263	2N5770
Q104	P00347001	TRANSISTOR, SILICO, NPN	04713	2N3904
Q105	303000032	TRANSISTOR, SILICO, NPN	07263	2N5769
Q106	303000032	TRANSISTOR, SILICO, NPN	07263	2N5769
Q107	303000033	TRANSISTOR, SILICO, NPN	07263	2N5770
Q108	303000033	TRANSISTOR, SILICO, NPN	07263	2N5770

P00336100-35, MAIN PCB ASSEMBLY, P25 (Continued) AA

REF. DESIG.	RACAL-DANA P/N	DESCRIPTION	FSC	MFG. P/N
Q109	303000021	TRANSISTOR, SILICO, PNP	07263	2N4258
Q110	303000021	TRANSISTOR, SILICO, PNP	07263	2N4258
Q111	P00347008	TRANSISTOR, SILICO, NPN	04713	MPS6515
Q113	P00347001	TRANSISTOR, SILICO, NPN	04713	2N3904
Q114	P00347102	TRANSISTOR, SILICO, PNP	04713	2N3906
Q201	303000016	TRANSISTOR, SILICO, PNP	01295	2N3251A
Q202	303000021	TRANSISTOR, SILICO, PNP	07263	2N4258
Q203	303000021	TRANSISTOR, SILICO, PNP	07263	2N4258
Q204	P00347001	TRANSISTOR, SILICO, NPN	04713	2N3904
Q205	P00347001	TRANSISTOR, SILICO, NPN	04713	2N3904
Q206	303000034	TRANSISTOR, SILICO, PNP	07263	2N5771
Q207	303000032	TRANSISTOR, SILICO, NPN	07263	2N5769
Q208	303000032	TRANSISTOR, SILICO, NPN	07263	2N5769
Q209	303000032	TRANSISTOR, SILICO, NPN	07263	2N5769
Q301	303000016	TRANSISTOR, SILICO, PNP	01295	2N3251A
Q302	303000021	TRANSISTOR, SILICO, PNP	07263	2N4258
Q304	P00347001	TRANSISTOR, SILICO, NPN	04713	2N3904
Q305	P00347001	TRANSISTOR, SILICO, NPN	04713	2N3904
Q306	303000034	TRANSISTOR, SILICO, PNP	07263	2N5771
Q307	303000032	TRANSISTOR, SILICO, NPN	07263	2N5769
Q308	303000032	TRANSISTOR, SILICO, NPN	07263	2N5769
Q401	P00347102	TRANSISTOR, SILICO, PNP	04713	2N3906
Q403	303000021	TRANSISTOR, SILICO, PNP	07263	2N4258
Q404	P00347001	TRANSISTOR, SILICO, NPN	04713	2N3904

P00336100-35, MAIN PCB ASSEMBLY, P25 (Continued) AA

REF. DESIG.	RACAL-DANA P/N	DESCRIPTION	FSC	MFG. P/N
Q405	303000032	TRANSISTOR, SILICO, NPN	07263	2N5769
Q406	303000021	TRANSISTOR, SILICO, PNP	07263	2N4258
Q407	303000021	TRANSISTOR, SILICO, PNP	07263	2N4258
Q501	303000016	TRANSISTOR, SILICO, PNP	01295	2N3251A
Q502	303000034	TRANSISTOR, SILICO, PNP	07263	2N5771
Q503	303000034	TRANSISTOR, SILICO, PNP	07263	2N5771
Q504	303000034	TRANSISTOR, SILICO, PNP	07263	2N5771
Q505	303000032	TRANSISTOR, SILICO, NPN	07263	2N5769
Q506	303000032	TRANSISTOR, SILICO, NPN	07263	2N5769
Q507	303000032	TRANSISTOR, SILICO, NPN	07263	2N5769
Q508	P00347002	TRANSISTOR, SILICO, NPN	04713	2N2369A
Q509	P00347099	TRANSISTOR, MATCHED PAIR (WITH Q511)	21793	P00347009
Q510	303000032	TRANSISTOR, SILICO, NPN	07263	2N5769
Q511	P00347099	TRANSISTOR, MATCHED PAIR (WITH 509)	21793	P00347099
Q512	303000034	TRANSISTOR, SILICO, PNP	07263	2N5771
Q513	303000032	TRANSISTOR, SILICO, NPN	07263	2N5769
Q514	303000034	TRANSISTOR, SILICO, PNP	07263	2N5771
Q515	P00347102	TRANSISTOR, SILICO, PNP	04713	2N3906
Q516	P00347102	TRANSISTOR, SILICO, PNP	04713	2N3906
Q517	P00347102	TRANSISTOR, SILICO, PNP	04713	2N3906
Q518	303000032	TRANSISTOR, SILICO, NPN	07263	2N5769
Q520	P00347102	TRANSISTOR, SILICO, PNP	04713	2N3906
Q552	303000025	TRANSISTOR, SILICO, NPN	02735	2N5109
Q553	303000065	TRANSISTOR, SILICO, PNP	04713	MPS404A

P00336100-35, MAIN PCB ASSEMBLY, P25 (Continued) AA

REF. DESIG.	RACAL-DANA P/N	DESCRIPTION	FSC	MFG. P/N
Q555	P00347002	TRANSISTOR, SILICO, NPN	04713	2N2369A
Q556	303000015	TRANSISTOR, SILICO, PNP	04713	2N2905A
Q557	P00347001	TRANSISTOR, SILICO, NPN	04713	2N3904
Q558	303000013	TRANSISTOR, SILICO, NPN	04713	2N2219A
Q559	303000037	TRANSISTOR, SILICO, PNP	04713	2N5583
Q560	303000037	TRANSISTOR, SILICO, PNP	04713	2N5583
Q561	303000063	TRANSISTOR, SILICO, PNP	04713	MM4018
Q562	303000063	TRANSISTOR, SILICO, PNP	04713	MM4018
Q565	P00347102	TRANSISTOR, SILICO, PNP	04713	2N3906
Q601	303000016	TRANSISTOR, SILICO, PNP	01295	2N3251A
Q602	303000034	TRANSISTOR, SILICO, PNP	07263	2N5771
Q603	303000034	TRANSISTOR, SILICO, PNP	07263	2N5771
Q604	303000034	TRANSISTOR, SILICO, PNP	07263	2N5771
Q605	303000032	TRANSISTOR, SILICO, NPN	02763	2N5769
Q606	303000032	TRANSISTOR, SILICO, NPN	02763	2N5769
Q607	303000032	TRANSISTOR, SILICO, NPN	02763	2N5769
Q608	P00347002	TRANSISTOR, SILICO, NPN	04713	2N2369A
Q609	P00347099	TRANSISTOR, MATCHED PAIR (WITH Q611)	21793	P00347099
Q610	303000032	TRANSISTOR, SILICO, NPN	07263	2N5769
Q611	P00347099	TRANSISTOR, MATCHED (WITH Q609)	21793	P00347099
Q612	303000034	TRANSISTOR, SILICO, PNP	07263	2N5771
Q613	303000032	TRANSISTOR, SILICO, NPN	07263	2N5769
Q614	303000034	TRANSISTOR, SILICO, PNP	07263	2N5771
Q615	P00347102	TRANSISTOR, SILICO, PNP	04713	2N3906

P00336100-35, MAIN PCB ASSEMBLY, P25 (Continued) AA

REF. DESIG.	RACAL-DANA P/N	DESCRIPTION	FSC	MFG. P/N
Q616	P00347102	TRANSISTOR, SILICO, PNP	04713	2N3906
Q617	P00347102	TRANSISTOR, SILICO, PNP	04713	2N3906
Q18	303000032	TRANSISTOR, SILICO, NPN	07263	2N5769
Q620	P00347102	TRANSISTOR, SILICO, PNP	04713	2N3906
Q652	P00347103	TRANSISTOR, SILICO, PNP	21793	P00347103
Q653	303000065	TRANSISTOR, SILICO, PNP	04713	MPS404A
Q655	P00347103	TRANSISTOR, SILICO, PNP	21793	P00347103
Q656	303000013	TRANSISTOR, SILICO, NPN	04713	2N2219A
Q657	P00347102	TRANSISTOR, SILICO, PNP	04713	2N3906
Q658	303000015	TRANSISTOR, SILICO, PNP	04713	2N2905A
Q659	303000066	TRANSISTOR, SILICO, NPN	02735	2N5943
Q660	303000066	TRANSISTOR, SILICO, NPN	02735	2N5943
Q661	303000019	TRANSISTOR, SILICO, NPN	02735	2N3866
Q662	303000019	TRANSISTOR, SILICO, NPN	02735	2N3866
Q665	P00347001	TRANSISTOR, SILICO, NPN	04713	2N3904
Q701	P00347001	TRANSISTOR, SILICO, NPN	04713	2N3904
Q702	P00347102	TRANSISTOR, SILICO, PNP	04713	2N3906
Q703	P00347102	TRANSISTOR, SILICO, PNP	04713	2N3906
Q704	P00347001	TRANSISTOR, SILICO, NPN	04713	2N3904
Q751	P00347001	TRANSISTOR, SILICO, NPN	04713	2N3904
Q752	P00347102	TRANSISTOR, SILICO, PNP	04713	2N3906
Q753	P00347102	TRANSISTOR, SILICO, PNP	04713	2N3906
Q755	303000013	TRANSISTOR, SILICO, NPN	04713	2N2219A
Q801	303000034	TRANSISTOR, SILICO, PNP	07263	2N5771

P00336100-35, MAIN PCB ASSEMBLY, P25 (Continued) AA

REF. DESIG.	RACAL-DANA P/N	DESCRIPTION	FSC	MFG. P/N
Q802	303000034	TRANSISTOR, SILICO, PNP	07263	2N5771
Q803	P00347002	TRANSISTOR, SILICO, NPN	04713	2N2369A
Q805	P00347002	TRANSISTOR, SILICO, NPN	04713	2N2369A
Q806	303000034	TRANSISTOR, SILICO, PNP	07263	2N5771
Q807	303000034	TRANSISTOR, SILICO, PNP	07263	2N5771
Q808	P00347002	TRANSISTOR, SILICO, NPN	04713	2N2369A
Q810	303000032	TRANSISTOR, SILICO, NPN	07263	2N5769
Q811	303000064	TRANSISTOR, SILICO, PNP	01295	MPS-U55
Q812	303000032	TRANSISTOR, SILICO, NPN	07263	2N5769
Q814	303000032	TRANSISTOR, SILICO, NPN	07263	2N5769
Q902	303000013	TRANSISTOR, SILICO, NPN	04713	2N2219A
Q903	303000013	TRANSISTOR, SILICO, NPN	04713	2N2219A
Q905	303000015	TRANSISTOR, SILICO, PNP	04713	2N2905A
Q906	303000015	TRANSISTOR, SILICO, PNP	04713	2N2905A
R101	000225	RES, CARBON, 2.2M, 1/4W, 5%	81349	RC07GF225J
R103	P00347679-103	RES, VARIABLE, 10K, 1/4W, 30%	71590	TSV-10K
R104	P00347618-1002	RES, MATCHED PAIR (WITH R105)	21793	P00347618-1002
R105	P00347618-1002	RES, MATCHED PAIR (WITH R104)	21793	P00347618-1002
R106	000102	RES, CARBON, 1K, 1/4W, 5%	81349	RC07GF102J
R108	P00347601-5621	RES, METAL FILM, 5.62K, 1/2W, 1%	01295	MC60D-5621F
R109	000154	RES, CARBON, 150K, 1/4W, 5%	81349	RC07GF154J
R110	P00347601-9760	RES, METAL FILM, 976 OHM, 1/2W, 1%	01295	MC60D-9760F
R111	P00347601-6650	RES, METAL FILM, 665 OHM, 1/2W, 1%	01295	MC60D-6650F
R112	000752	RES, CARBON, 7.5K, 1/4W, 5%	81349	RC07GF752J

P00336100-35, MAIN PCB ASSEMBLY, P25 (Continued) AA

REF. DESIG.	RACAL-DANA P/N	DESCRIPTION	FSC	MFG. P/N
R113	P00347601-2001	RES, METAL FILM, 1/2W, 1%	01295	MC60D-2001F
R114	P00347601-31R9	RES, METAL FILM, 61.9 OHM, 1/2W, 1%	01295	MC60D-61R9F
R115	000681	RES, CARBON, 680 OHM, 1/4W, 5%	81349	RC07GF681J
R116	P00347601-4870	RES, METAL FILM, 487 OHM, 1/2W, 1%	01295	MC60D-4870F
R117	302000009	RES, WW, 10K, 1/4W, 1%	21793	302000009
R118	000510	RES, CARBON, 51 OHM, 1/4W, 5%	81349	RC07GF510J
R119	P00347601-1070	RES, METAL FILM, 107 OHM, 1/2W, 1%	01295	MC60D-1070F
R120	P00347679-101	RES, VARIABLE, 100 OHM, 1/4W, 30%	71590	TSV-100
R121	010560	RES, METAL FILM, 357 OHM, 1/2W, 1%	01295	MC60D-3570F
R122	P00347679-501	RES, VARIABLE, 500 OHM, 1/4W, 30%	71590	TSV-500
R123	000242	RES, CARBON, 2.4K, 1/4W, 5%	81349	RC07GF242J
R124	P00347601-4641	RES, METAL FILM, 4.64K, 1/2W, 1%	01295	MC60D-4641F
R125	P00347601-1301	RES, METAL FILM, 1.3K, 1/2W, 1%	01295	MC60D-1301F
R126	P00347679-503	RES, VARIABLE, 50K, 1/4W, 30%	71590	TSV-50K
R127	P00347601-2210	RES, METAL FILM, 221 OHM, 1/2W, 1%	01295	MC60D2210F
R128	P00347601-1821	RES, METAL FILM, 1.82K, 1/2W, 1%	01295	MC60D-1821F
R129	000102	RES, CARBON, 1K, 1/4W, 5%	81349	RC07GF102J
R130	000102	RES, CARBON, 1K, 1/4W, 5%	81349	RC07GF102J
R132	P00347601-1581	RES, METAL FILM, 1.58K, 1/2W, 1%	01295	MC60D-1581F
R133	000153	RES, CARBON, 15K, 1/4W, 5%	81349	RC07GF153J
R134	000201	RES, CARBON, 200 OHM, 1/4W, 5%	81349	RC07GF201J
R135	001682	RES, CARBON, 1.5K, 1/2W, 5%	81349	RC20GF152J
R136	000390	RES, CARBON, 39 OHM, 1/4W, 5%	81349	RC07GF390J
R137	000201	RES, CARBON, 200 OHM, 1/4W, 5%	81349	RC07GF201J
R138	P00347621-751	RES, METAL GLAZE, 750 OHM, 1/2W, 5%	75042	RG20-751J
R143	P00347679-103	RES, VARIABLE, 10K, 1/4W, 30%	71590	TSV-10K

P00336100-35, MAIN PCB ASSEMBLY, P25 (Continued) AA

REF. DESIG.	RACAL-DANA P/N	DESCRIPTION	FSC	MFG. P/N
R144	P00347601-2001	RES, METAL FILM, 2.0K, 1/2W, 1%	01295	MC60D-2001F
R145	P00347601-8870	RES, METAL FILM, 887 OHM, 1/2W, 1%	01295	MC60D-8870F
R146	010560	RES, METAL FILM, 357 OHM, 1/2W, 1%	81349	RN60D3570F
R147	000474	RES, CARBON, 470K, 1/4W, 5%	81349	RC07GF474J
R148	000474	RES, CARBON, 470K, 1/4W, 5%	81349	RC07GF474J
R149	000474	RES, CARBON, 470K, 1/4W, 5%	81349	RC07GF474J
R150	000474	RES, CARBON, 470K, 1/4W, 5%	81349	RC07GF474J
R151	P00347679-253	RES, VARIABLE, 25K, 1/4W, 30%	71590	TSV-25K
R153	000332	RES, CARBON, 3.3K, 1/4W, 5%	81349	RC07GF332J
R154	010079	RES, METAL FILM, 7.5K, 1/2W, 1%	81349	RN60D7501F
R155	P00347618-1002	RES, MATCHED PAIR (WITH R156)	21793	P00347618-1002
R156	P00347618-1002	RES, MATCHED PAIR (WITH R156)	21793	P00347618-1002
R157	00363	RES, CARBON, 36K, 1/4W, 5%	81349	RC07GF363J
R158	P00347679-503	RES, VARIABLE, 50K, 1/4W, 30%	71590	TSV-50K
R159	000472	RES, CARBON, 4.7K, 1/4W, 5%	81349	RC07GF472J
R160	010252	RES, METAL FILM, 51.1 OHM, 1%	81349	RN60D51R1F
R201	P00347679-102	RES, VARIABLE, 1K, 1/4W, 30%	71590	TSV-1K
R202	P00347601-1101	RES, METAL FILM, 1.10K, 1/2W, 1%	01295	MC60D-1101F
R203	010064	RES, METAL FILM, 4.32 OHM, 1/2W, 1%	81349	RN60D4321F
R204	000101	RES, CARBON, 100 OHM, 1/4W, 5%	81349	RC07GF100J
R205	000154	RES, CARBON, 150K, 1/4W, 5%	81349	RC07GF154J
R206	000332	RES, CARBON, 3.3K, 1/4W, 5%	81349	RC07GF332J
R207	000391	RES, CARBON, 390 OHM, 1/4W, 5%	81349	RC07GF391J
R208	P00347679-503	RES, VARIABLE, 50K, 1/4W, 30%	71590	TSV-50K
R209	010388	RES, METAL FILM, 200 OHM, 1/4W, 5%	81349	RN60D2000F

P00336100-35, MAIN PCB ASSEMBLY, P25 (Continued) AA

REF. DESIG.	RACAL-DANA P/N	DESCRIPTION	FSC	MFG. P/N
R210	000202	RES, CARBON, 2K, 1/4W, 5%	81349	RC07GF202J
R211	000103	RES, CARBON, 10K, 1/4W, 5%	81349	RC07GF103J
R212	P00347601-3090	RES, METAL FILM, 309 OHM, 1/2W, 1%	01295	MC60D-3090F
R213	010259	RES, METAL FILM, 1K, 1/2W, 1%	81349	RN60D1001F
R214	P00347601-49R9	RES, METAL FILM, 49.9 OHM, 1/2, 1%	01295	MC60D-49R9F
R215	000680	RES, CARBON, 68 OHM, 1/4W, 5%	81349	RC07GF680J
R216	P00347621-911	RES, METAL GLAZE, 910 OHM, 1/2W, 5%	75042	RG20-911J
R217	P00347601-1070	RES, METAL FILM, 107 OHM, 1/2W, 1%	01295	MC60D-1070F
R218	P00347621-102	RES, METAL GLAZE, 1K, 1/2W, 5%	75042	RG20-102J
R219	000201	RES, CARBON, 200 OHM, 1/4W, 5%	81349	RC07GF201J
R220	P00347601-1471	RES, METAL FILM, 1.47K, 1/2W, 1%	01295	MC60D-1471F
R221	P00347679-501	RES, VARIABLE, 500 OHM, 1/4W, 30%	71590	TSV-500
R222	010040	RES, METAL FILM, 178 OHM, 1/2W, 1%	81349	RN60D1780F
R223	000124	RES, CARBON, 120K, 1/4W, 5%	81349	RC07GF124J
R224	000561	RES, CARBON, 560 OHM, 1/4W, 5%	81349	RC07GF561J
R225	000510	RES, CARBON, 51 OHM, 1/4W, 5%	81349	RC07GF510J
R301	P00347679-102	RES, VARIABLE, 1K, 1/4W, 30%	71590	TSV-1K
R302	P00347601-1101	RES, METAL FILM, 1.10K, 1/2W, 1%	01295	MC60D-1101F
R303	010064	RES, METAL FILM, 4.32K, 1/2W, 1%	81349	RN60D4321F
R304	000101	RES, CARBON, 100 OHM, 1/4W, 5%	81349	RC07GF101J
R305	000154	RES, CARBON, 150K, 1/4W, 5%	81349	RC07GF154J
R306	000332	RES, CARBON, 3.3K, 1/4W, 5%	81349	RC07GF332J
R307	000391	RES, CARBON, 390 OHM, 1/4W, 5%	81349	RC07GF391J
R308	P00347679-503	RES, VARIABLE, 50K, 1/4W, 30%	71590	TSV-50K

REF. DESIG.	RACAL-DANA P/N	DESCRIPTION	FSC	MFG. P/N
R309	000124	RES, CARBON, 120K, 1/4W, 5%	81349	RC07GF124J
R310	010388	RES, METAL FILM, 200 OHM, 1/2W, 1%	81349	RN60D2000F
R312	P00347601-3090	RES, METAL FILM, 309 OHM, 1/2W, 1%	01295	MC60D-3090F
R313	000101	RES, CARBON, 100 OHM, 1/4W, 5%	81349	RC07GF101J
R314	P00347601-49R9	RES, METAL FILM, 49.9 OHM, 1/2W, 1%	01295	MC60D-49R9F
R315	000680	RES, CARBON, 68 OHM, 1/4W, 5%	81349	RC07GF680J
R316	P00347621-911	RES, METAL GLAZE, 910 OHM, 1/2W, 5%	75042	RG20-911J
R317	P00347601-1070	RES, METAL FILM, 107 OHM, 1/2W, 1%	01295	MC60D-1070F
R318	P00347621-102	RES, METAL GLAZE, 1K, 1/2W, 5%	75042	RG20-102J
R319	000472	RES, CARBON, 4.7K, 1/4W, 5%	81349	RC07GF472J
R320	P00347601-1471	RES, METAL FILM, 1.47K, 1/2W, 1%	01295	MC60D-1471F
R321	000472	RES, CARBON, 4.7K, 1/4W, 5%	81349	RC07GF472J
R322	010040	RES, METAL FILM, 178 OHM, 1/2W, 1%	81349	RN60D1780F
R324	000561	RES, CARBON, 560 OHM, 1/4W, 5%	81349	RC07GF561J
R325	000510	RES, CARBON, 510 OHM, 1/4W, 5%	81349	RC07GF510J
R326	P00347679-501	RES, VARIABLE, 500 OHM, 1/4W, 30%	71590	TSV-500
R328	000202	RES, CARBON, 2K, 1/4W, 5%	81349	RC07GF202J
R329	000202	RES, CARBON, 2K, 1/4W, 5%	81349	RC07GF202J
R330	000201	RES, CARBON, 200 OHM, 1/4W, 5%	81349	RC07GF201J
R331	010259	RES, METAL FILM, 1K, 1/2W, 1%	81349	RN60D1001F
R333	000561	RES, CARBON, 560 OHM, 1/4W, 5%	81349	RC07GF561J
R401	010498	RES, METAL FILM, 806 OHM, 1/4W, 5%	81349	RN60D8060F
R402	010064	RES, METAL FILM, 4.32K, 1/2W, 1%	81349	RN60D4321F
R404	P00347601-1500	RES, METAL FILM, 150 OHM, 1/2W, 1%	01295	MC60D-1500F

P00336100-35, MAIN PCB ASSEMBLY, P25 (Continued) AA

REF. DESIG.	RACAL-DANA P/N	DESCRIPTION	FSC	MFG. P/N
R405	010101	RES, METAL FILM, 715 OHM, 1/2W, 1%	81349	RN60D7150F
R406	010214	RES, METAL FILM, 5.11K, 1/2W, 1%	81349	RN60D5111F
R407	010388	RES, METAL FILM, 200 OHM, 1/2W, 1%	81349	RN60D2000F
R408	010113	RES, METAL FILM, 15K, 1/2W, 1%	81349	RN60D1502F
R409	001682	RES, CARBON, 1.5K, 1/2W, 5%	81349	RC20GF152J
R410	000390	RES, CARBON, 39 OHM, 1/4W, 5%	81349	RC07GF390J
R411	P00347679-251	RES, VARIABLE, 250 OHM, 1/4W, 30%	71590	TSV-250
R412	P00347601-2001	RES, METAL FILM, 2.00K, 1/2W, 1%	01295	MC60D-2001F
R413	P00347601-2001	RES, METAL FILM, 2.00K, 1/2W, 1%	01295	MC60D-2001F
R414	000101	RES, CARBON, 100 OHM, 1/4W, 5%	81349	RC07GF101J
R415	P00347601-1151	RES, METAL FILM, 1.15K, 1/2W, 1%	01295	MC60D-1151F
R416	P00347601-2001	RES, METAL FILM, 2.00K, 1/2W, 1%	01295	MC60D-2001F
R417	P00347601-2001	RES, METAL FILM, 2.00K, 1/2W, 1%	01295	MC60D-2001F
R418	P00347601-3571	RES, METAL FILM, 3.57K, 1/2W, 1%	01295	MC60D-3571F
R419	000620	RES, CARBON, 62 OHM, 1/4W, 5%	81349	RC07GF620J
R420	P00347601-1821	RES, METAL FILM, 1.82K, 1/2W, 1%	01295	MC60D-1821F
R421	000102	RES, CARBON, 1K, 1/4W, 5%	81349	RC07GF102J
R422	000510	RES, CARBON, 51 OHM	81349	RC07GF510J
R501	P00347601-7870	RES, METAL FILM, 787 OHM, 1/2W, 1%	01295	MC60D-7870F
R502	P00347601-1580	RES, METAL FILM, 158 OHM, 1/2W, 1%	01295	MC60D-1580F
R503	010521	RES, METAL FILM, 348 OHM, 1/2W, 1%	81349	RN60D3480F
R504	P00347601-1051	RES, METAL FILM, 1.05K, 1/2W, 1%	01295	MC60D-1051F
R505	P00347601-5110	RES, METAL FILM, 511 OHM, 1/2W, 1%	01295	MC60D-5110F
R506	P00347601-2150	RES, METAL FILM, 215 OHM, 1/2W, 1%	01295	MC60D-2150F

P00336100-35, MAIN PCB ASSEMBLY, P25 (Continued) AA

REF. DESIG.	RACAL-DANA P/N	DESCRIPTION	FSC	MFG. P/N
R507	010287	RES, METAL FILM, 3.01K, 1/2W, 1%	81349	RN60D3011F
R508	010011	RES, METAL FILM, 2.21K, 1/2W, 1/2W, 1%	81349	RN60D2211F
R509	P00347601-2371	RES, METAL FILM, 2.37K, 1/2W, 1%	01295	MC60D-2371F
R510	P00347601-6190	RES, METAL FILM, 619 OHM, 1/2W, 1%	01295	MC60D-6190F
R511	000680	RES, CARBON, 68 OHM, 1/4W, 5%	81349	RC07GF680J
R512	000680	RES, CARBON, 68 OHM, 1/4W, 5%	81349	RC07GF680J
R513	P00347601-6190	RES, METAL FILM, 6199 OHM, 1/2W, 1%	01295	MC60D6190F
R514	P00347601-2371	RES, METAL FILM, 2.37 OHM, 1/2W, 1%	01295	MC60D-2371F
R515	010011	RES, METAL FILM, 2.21F, 1/2W, 1%	81349	RN60D2211F
R516	010287	RES, METAL FILM, 3.01K, 1/2W, 1%	81349	RN60D3011F
R517	P00347621-2150	RES, METAL FILM, 215 OHM, 1/2W, 1%	01295	MC60D-2150F
R518	P00347601-5110	RES, METAL FILM, 511 OHM, 1/2W, 1%	01295	MC60D-5110F
R519	000474	RES, CARBON, 470K, 1/4, 5%	81349	RC07GF474J
R520	010012	RES, CARBON, 2.43K, 1/2W, 1%	81349	RN60D2431F
R521	P00347679-101	RES, VARIABLE, 100 OHM, 1/4W, 3%	75190	TSV-100
R522	010561	RES, METAL FILM, 365 OHM, 1/4W, 5%	81349	RN60D3650F
R523	010561	RES, METAL FILM, 365 OHM, 1/4W, 5%	81349	RN60D3650F
R524	P00347679-101	RES, VARIABLE, 100 OHM, 1/4W, 30%	71590	TSV-100
R525	010012	RES, METAL FILM, 2.43K, 1/2W, 1%	81349	RN60D2431F
R526	000474	RES, CARBON, 470K, 1/4W, 5%	81349	RC07GF474J
R527	000103	RES, CARBON, 10K, 1/4W, 5%	81349	RC07GF103J
R528	000103	RES, CARBON, 10K, 1/4W, 5%	81349	RC07GF103J
R529	010020	RES, METAL FILM, 4.99K, 1/2W, 1%	81349	RN60D4991F
R530	P00347679-501	RES, VARIABLE, 500 OHM,1/4W, 30%	71590	TSV-500

P00336100-35, MAIN PCB ASSEMBLY, P25 (Continued) AA

REF. DESIG.	RACAL-DANA P/N	DESCRIPTION	FSC	MFG. P/N
R531	010388	RES, METAL FILM, 200 OHM, 1/2W, 1%	81349	RN60D2000F
R532	001682	RES, CARBON, 1.5K, 1/2W, 5%	81349	RC20GF152J
R533	001682	RES, CARBON, 1.5K, 1/2W, 5%	81349	RC20GF152J
R534	010020	RES, METAL FILM, 4.99K, 1/2W, 1%	81349	RN60D4991F
R535	P00347679-501	RES, VARIABLE, 500 OHM, 1/4W, 30%	71590	TSV-500
R536	010388	RES, METAL FILM, 200 OHM, 1/2W, 1%	81349	RN60D2000F
R537	P00347620-5R6	RES, CARBON, 5.6 OHM, 1/4W, 5%	75042	RC07GF5R6J
R538	P00347620-5R6	RES, CARBON, 5.6 OHM, 1/4W, 5%	75042	RC07GF5R6J
R539	000183	RES, CARBON, 18K, 1/4W, 5%	81349	RC07GF183J
R540	000151	RES, CARBON, 150 OHM, 1/4W, 5%	81349	RC07GF151J
R541	000472	RES, CARBON, 4.7K, 1/4W, 5%	81349	RC07GF472J
R542	000472	RES, CARBON, 4.7K, 1/4W, 5%	81349	RC07GF472J
R543	000472	RES, CARBON, 4.7K, 1/4W, 5%	81349	RC07GF472J
R544	000390	RES, CARBON, 39 OHM, 1/4W, 5%	81349	RC07GF390J
R545	000390	RES, CARBON, 39 OHM, 1/4W, 5%	81349	RC07GF390J
R547	000122	RES, CARBON, 1.2K, 1/4W, 5%	81349	RC07GF122J
R548	P00347621-132	RES, METAL GLAZE, 1.3K, 1/2W, 5%	75042	RG20-132J
R549	000150	RES, CARBON, 15 OHM, 1/4W, 5%	81349	RC07GF150J
R551	000272	RES, CARBON, 2.7K, 1/4W, 5%	81349	RC07GF272J
R552	000201	RES, CARBON, 200 OHM, 1/4W, 5%	81349	RC07GF201J
R554	001737	RES, FSV	21793	001737
R555	000162	RES, CARBON, 1.6K, 1/4W, 5%	81349	RC07GF162J
R556	010252	RES, METAL FILM, 51.1 OHM, 1/2W, 1%	81349	RN60D51R1F
R557	P00347601-60R4	RES, METAL FILM, 60.4 OHM, 1/2W, 1%	01295	MC60D-60R4F

P00336100-35, MAIN PCB ASSEMBLY, P25 (Continued) AA

REF. DESIG.	RACAL-DANA P/N	DESCRIPTION	FSC	MFG. P/N
R558	P00347601-82R5	RES, METAL FILM, 82.5 OHM, 1/2W, 1%	01295	MC60D-82R5F
R559	000820	RES, CARBON, 82 OHM, 1/4W, 5%	81349	RC07GF820J
R562	P00347601-2001	RES, METAL FILM, 2.00K, 1/2W, 1%	01295	MC60D-2001F
R563	010012	RES, METAL FILM, 2.43K, 1/2W, 1%	81349	RN60D2431F
R564	P00347601-5110	RES, METAL FILM, 511 OHM, 1/2W, 1%	01295	MC60D-5110F
R565	010137	RES, METAL FILM, 100 OHM, 1/2W, 1%	81349	RN60D1000F
R566	P00347679-501	RES, VARIABLE, 500 OHM, 1/4W, 30%	71590	TSV-500
R567	P00347601-2001	RES, METAL FILM, 2.00K, 1/2W, 1%	01295	MC60D-2001F
R569	P00347621-112	RES, METAL GLAZE, 1.1K, 1/2W, 5%	75042	RG20-112J
R572	001737	RES, FSV (20 OHM NOM.)	21793	001737
R573	000162	RES, CARBON, 1.6K, 1/4W, 5%	81349	RC07GF162J
R575	001737	RES, FSV (22 OHM NOM.)	21793	001737
R579	000301	RES, CARBON, 300 OHM, 1/4W, 5%	81349	RC07GF301J
R580	P00347613-1000	RES, METAL FILM, 100 OHM, 1W, 1%	75042	MEB-TO-1000D
R581	P00347613-1000	RES, METAL FILM, 100 OHM, 1W, 1%	75042	MEB-TO-1000D
R582	000124	RES, CARBON, 120K, 1/4W, 5%	81349	RC07GF124J
R583	000182	RES, CARBON, 1.8K, 1/4W, 5%	81349	RC07GF182J
R585	000750	RES, CARBON, 75 OHM, 1/4W, 5%	81349	RC07GF750J
R586	000750	RES, CARBON, 75 OHM, 1/4W, 5%	81349	RC07GF750J
R587	P00347601-3090	RES, METAL FILM, 309 OHM, 1/2W, 1%	01295	MC60D-3090F
R588	P00347601-3090	RES, METAL FILM, 309 OHM, 1/2W, 1%	01295	MC60D-3090F
R594	000183	RES, CARBON, 18K, 1/4W, 5%	81349	RC07GF183J
R596	000202	RES, CARBON, 2K, 1/4W, 5%	81349	RC07GF202J
R597	000202	RES, CARBON, 2K, 1/4W, 5%	81349	RC07GF202J

P00336100-35, MAIN PCB ASSEMBLY, P25 (Continued) AA

REF. DESIG.	RACAL-DANA P/N	DESCRIPTION	FSC	MFG. P/N
R598	001796	RES, CARBON, 2.7 OHM, 1/4W, 5%	81349	RC07GF2R7J
R599	000202	RES, CARBON, 2K, 1/4W, 5%	81349	RC07GF202J
R601	P00347601-7870	RES, METAL FILM, 787 OHM, 1/2W, 1%	01295	MC60D-7870F
R602	P00347601-1580	RES, METAL FILM, 158 OHM, 1/2W, 1%	01295	MC60D-1580F
R603	010521	RES, METAL FILM, 348 OHM, 1/2W, 1%	81349	RN60D3480F
R604	P00347601-1051	RES, METAL FILM, 1.05K, 1/2W, 1%	01295	MC60D-1051F
R606	P00347601-2150	RES, METAL FILM, 215 OHM, 1/2W, 1%	01295	MC60D-2150F
R607	010287	RES, METAL FILM, 3.01K, 1/2W, 1%	81349	RN60D3011F
R608	010011	RES, METAL FILM, 2.21K, 1/2W, 1%	81349	RN60D2211F
R609	P00347601-2321	RES, METAL FILM, 2.32K, 1/2W, 1%	01295	MC60D-2321F
R610	010300	RES, METAL FILM, 750 OHM, 1/2W, 1%	81349	RN60D7500F
R611	000680	RES, CARBON, 68 OHM, 1/4W, 5%	81349	RC07GF680J
R612	000680	RES, CARBON, 68 OHM, 1/4W, 5%	81349	RC07GF680J
R613	P00347601-5110	RES, METAL FILM, 511 OHM, 1/2W, 1%	01295	MC60D-5110F
R614	010012	RES, METAL FILM, 2.37K, 1/2W, 1%	81349	RN60D2371F
R615	010011	RES, METAL FILM, 2.21K, 1/2W, 1%	81349	RN60D2211F
R616	010287	RES, METAL FILM, 3.01K, 1/2W, 1%	81349	RN60D3011F
R617	P00347601-2150	RES, METAL FILM, 215 OHM, 1/2W, 1%	01295	MC60D-2150F
R619	000474	RES, CARBON, 470K, 1/4W, 5%	81349	RC07GF474J
R620	010012	RES, METAL, 2.43K, 1/2W, 1%	81349	RN60D2431F
R621	P00347679-101	RES, VARIABLE, 100 OHM, 1/4W, 30%	71590	TSV-100
R622	010561	RES, METAL, 365 OHM, 1/2W, 1%	81349	RN60D3650F
R623	010561	RES, METAL, 365 OHM, 1/2W, 1%	81349	RN60D3650F
R624	P00347679-101	RES, VARIABLE, 100 OHM, 1/4W, 30%	71590	TSV-100

P00336100-35, MAIN PCB ASSEMBLY, P25 (Continued) AA

REF. DESIG.	RACAL-DANA P/N	DESCRIPTION	FSC	MFG. P/N
R625	010012	RES, METAL, 2.43K, 1/2W, 1%	81349	RN60D2431F
R626	000474	RES, CARBON, 470K, 1/4W, 5%	81349	RC07GF474J
R627	000103	RES, CARBON, 10K, 1/4W, 5%	81349	RC07GF103J
R628	000103	RES, CARBON, 10K, 1/4W, 5%	81349	RC07GF103J
R629	010020	RES, METAL, 4.99K, 1/2W, 1%	81349	RN60D4991F
R630	P00347679-501	RES, VARIBLE, 500 OHM, 1/2W, 30%	71590	TSV-500
R631	010388	RES, METAL, 200 OHM, 1/2W, 1%	81349	RN60D2000F
R632	001682	RES, CARBON, 1.5K, 1/2W, 5%	81349	RC20GF152J
R633	001682	RES, CARBON, 1.5K, 1/2W, 5%	81349	RC20GF152J
R634	010020	RES, METAL, 4.99K, 1/2W, 1%	81349	RN60D4991F
R635	P00347679-501	RES, VARIABLE, 500 OHM, 1/2W, 30%	71590	TSV-500
R636	010388	RES, METAL, 200 OHM, 1/2W, 1%	81349	RN60D2000F
R637	P00347620-5R6	RES, CARBON, 5.6 OHM, 1/4W, 5%	75042	RC07GF5R6J
R638	P00347620-5R6	RES, CARBON, 5.6 OHM, 1/4W, 5%	75042	RC07GF5R6J
R639	000183	RES, CARBON, 18K, 1/4W, 5%	81349	RC07GF183J
R640	302000222	RES, CARBON, 1K, 12, 5%	21793	302000222
R641	000472	RES, CARBON, 4.7K, 1/4W, 5%	81349	RC07GF472J
R642	000472	RES, CARBON, 4.7K, 1/4W, 5%	81349	RC07GF472J
R643	000472	RES, CARBON, 4.7K, 1/4W, 5%	81349	RC07GF472J
R644	000390	RES, CARBON, 39 OHM, 1/4W, 5%	81349	RC07GF390J
R645	000390	RES, CARBON, 39 OHM, 1/4W, 5%	81349	RC07GF390J
R647	000122	RES, CARBON, 1.2K, 1/4W, 5%	81349	RC07GF122J
R648	P00347621-132	RES, CARBON, 1.3K, 1/2W, 5%	75042	RG20-132J
R649	000150	RES, CARBON, 15 OHM, 1/4W, 5%	81349	RC07GF150J

P00336100-35, MAIN PCB ASSEMBLY, P25 (Continued) AA

REF. DESIG.	RACAL-DANA P/N	DESCRIPTION	FSC	MFG. P/N
R651	000272	RES, CARBON, 2.7K, 1/4W, 5%	81349	RC07GF272J
R652	000201	RES, CARBON, 200 OHM, 1/4W, 5%	81349	RC07GF201J
R654	001737	RES, FSV	21793	001737
R655	000162	RES, CARBON, 1.6K, 1/4W, 5%	81349	RC07GF162J
R656	010252	RES, METAL, 51.1 OHM, 1/2W, 1%	81349	RN60D51R1F
R657	P00347601-60R4	RES, METAL, 60.4 OHM, 1/4W, 5%	01295	MC60D-60R4F
R658	P00347601-82R5	RES, METAL, 82.5 OHM, 1/2W, 1%	01295	MC6D-82R5F
R659	000820	RES, CARBON, 82 OHM, 1/4W, 5%	81349	RC07GF820J
R662	P00347601-2001	RES, METAL, 2K, 1/2W, 1%	01295	MC60D-2001F
R663	010012	RES, METAL, 2.43K, 1/2W, 1%	81349	RN60D2431F
R664	P00347601-5110	RES, METAL, 511 OHM, 1/2W, 1%	01295	MC60D-5110F
R665	010137	RES, METAL, 100 OHM, 1/2W, 1%	81349	RN60D1000F
R666	P00347679-501	RES, VARIABLE, 500 OHM, 1/4W, 30%	71590	TSV-500
R667	P00347601-2001	RES, METAL, 2K, 1/2W, 1%	01295	MC60D-2001F
R669	P00347621-112	RES, METAL, 1.1K, 1/2W, 5%	75042	RG20-112J
R672	001737	RES, FSV (20 OHM NOM)	21793	001737
R673	000162	RES, CARBON, 1.6K, 1/2W, 1%	81349	RC07GF162J
R675	001737	RES, FSV (22 OHM NOM)	21793	001737
R679	000301	RES, CARBON, 300 OHM, 1/4W, 5%	81349	RC07GF301J
R680	P00347613-1000	RES, METAL, 100 OHM, 1W, 1%	01295	MC60D-1000F
R681	P00347613-1000	RES, METAL, 100 OHM, 1W, 1%	01295	MC60D-1000F
R682	000124	RES, CARBON, 120K, 1/4W, 5%	81349	RC07GF124J
R683	000182	RES, CARBON, 1.8K, 1/4W, 5%	81349	RC07GF182J
R685	000750	RES, CARBON, 75 OHM, 1/4W, 5%	81349	RC07GF750J

P00336100-35, MAIN PCB ASSEMBLY, P25 (Continued) AA

REF. DESIG.	RACAL-DANA P/N	DESCRIPTION	FSC	MFG. P/N
R686	000750	RES, CARBON, 75 OHM, 1/4W, 5%	81349	RC07GF750J
R687	P00347601-3090	RES, METAL, 309 OHM, 1/2W, 1%	01295	MC60D-3090F
R688	P00347601-3090	RES, METAL, 309 OHM, 1/2W, 1%	01295	MC60D-3090F
R694	000183	RES, CARBON, 18K, 1/4W, 5%	81349	RC07GF183J
R701	010113	RES, METAL, 15K, 1/2W, 1%	81349	RN60D1502F
R702	010113	RES, METAL, 15K, 1/2W, 1%	81349	RN60D1502F
R703	000102	RES, CARBON, 1K, 1/4W, 5%	81349	RC07GF102J
R704	000152	RES, CARBON, 1.5K, 1/4W, 5%	81349	RC07GF152J
R705	001725	RES, CARBON, 560 OHM, 1/2W, 5%	81349	RC20GF561J
R706	000102	RES, CARBON, 1K, 1/4W, 5%	81349	RC07GF102J
R707	302000204	RES, CARBON, 18 OHM, 2W, 5%	75042	RC42GF180J
R708	302000204	RES, CARBON, 18 OHM, 2W, 5%	75042	RC42GF180J
R709	000332	RES, CARBON, 3.3K, 1/4W, 5%	81349	RC07GF332J
R710	000272	RES, CARBON, 2.7K, 1/4W, 5%	81349	RC07GF272J
R711	000272	RES, CARBON, 2.7K, 1/4W, 5%	81349	RC07GF272J
R712	000272	RES, CARBON, 2.7K, 1/4W, 5%	81349	RC07GF272J
R713	000152	RES, CARBON, 1.5K, 1/4W, 5%	81349	RC07GF152J
R714	P00347679-103	RES, VARIABLE, 10K, 1/4W, 5%	71590	TSV-10K
R715	P00347679-103	RES, VARIABLE, 10K, 1/4W, 5%	71590	TSV-10K
R718	000102	RES, CARBON, 1K, 1/4W, 5%	81349	RC07GF102J
R719	000102	RES, CARBON, 1K, 1/4W, 5%	81349	RC07GF102J
R751	010113	RES, METAL, 15K, 1/2W, 1%	81349	RN60D1502F
R752	010113	RES, METAL, 15K, 1/2W, 1%	81349	RN60D1502F
R753	000102	RES, CARBON, 1K, 1/4W, 5%	81349	RC07GF102J

P00336100-35, MAIN PCB ASSEMBLY, P25 (Continued) AA

REF. DESIG.	RACAL-DANA P/N	DESCRIPTION	FSC	MFG. P/N
R754	302000484	RES, CARBON, 560 OHM, 1W, 5%	75042	RG32-561J
R755	000152	RES, CARBON, 1.5K, 1/4W, 5%	81349	RC07GF152J
R756	000102	RES, CARBON, 1K, 1/4W, 5%	81349	RC07GF102J
R757	302000204	RES, CARBON, 18 OHM, 2W, 5%	75042	RC42GF180J
R758	302000349	RES, CARBON, 33 OHM, 1W, 5%	75042	RG32-330J
R759	000332	RES, CARBON, 3.3K, 1/4W, 5%	81349	RC07GF332J
R760	000272	RES, CARBON, 2.7K, 1/4W, 5%	81349	RC07GF272J
R761	000272	RES, CARBON, 2.7K, 1/4W, 5%	81349	RC07GF272J
R762	000272	RES, CARBON, 2.7K, 1/4W, 5%	81349	RC07GF272J
R763	000152	RES, CARBON, 1.5K, 1/4W, 5%	81349	RC07GF152J
R764	P00347679-103	RES, VARIABLE, 10K, 1/2W, 30%	71590	TSV-10K
R765	P00347679-103	RES, VARIABLE, 10K, 1/2W, 30%	71590	TSV-10K
R768	000102	RES, CARBON, 1K, 1/4W, 5%	81349	RC07GF102J
R769	000511	RES, CARBON, 510 OHM, 1/4W, 5%	81349	RC07GF511J
R770	000511	RES, CARBON, 510 OHM, 1/4W, 5%	81349	RC07GF511J
R801	000361	RES, CARBON, 360 OHM, 1/4W, 5%	81349	RC07GF361J
R802	000361	RES, CARBON, 360 OHM, 1/4W, 5%	81349	RC07GF361J
R803	000470	RES, CARBON, 47 OHM, 1/4W, 5%	81349	RC07GF470J
R804	000510	RES, CARBON, 51 OHM, 1/4W, 5%	81349	RC07GF510J
R805	000561	RES, CARBON, 560 OHM, 1/4W, 5%	81349	RC07GF561J
R806	000180	RES, CARBON, 18 OHM, 1/4W, 5%	81349	RC07GF180J
R807	P00347621-132	RES, METAL GLAZE, 1.3K, 1/2W, 5%	75042	RG20-132J
R808	P00347621-470	RES, METAL GLAZE, 47 OHM, 1/2W, 5%	75042	RC20-470J
R810	P00347621-102	RES, METAL GLAZE, 1K, 1/2W, 5%	75042	RG20-102J

P00336100-35, MAIN PCB ASSEMBLY, P25 (Continued) AA

REF. DESIG.	RACAL-DANA P/N	DESCRIPTION	FSC	MFG. P/N
R811	000201	RES, CARBON, 200 OHM, 1/4W, 5%	81349	RC07GF201J
R812	000271	RES, CARBON, 270 OHM, 1/4W, 5%	81349	RC07GF271J
R813	P00347621-132	RES, METAL GLAZE, 1.3K, 1/2W, 5%	75042	RG20-132J
R814	P00347621-102	RES, METAL GLAZE, 1K, 1/2W, 5%	75042	RG20-102J
R815	000221	RES, CARBON, 220 OHM, 1/4W, 5%	81349	RC07GF221J
R816	000221	RES, CARBON, 220 OHM, 1/4W, 5%	81349	RC07GF221J
R817	000202	RES, CARBON, 2.2K, 1/4W, 5%	81349	RC07GF202J
R818	000432	RES, CARBON, 4.3K, 1/4W, 5%	81349	RC07GF432J
R819	000472	RES, CARBON, 4.7K, 1/4W, 5%	81349	RC07GF472J
R820	000202	RES, CARBON, 2K, 1/4W, 5%	81349	RC07GF202J
R821	000202	RES, CARBON, 2K, 1/4W, 5%	81349	RC07GF202J
R822	000202	RES, CARBON, 2K, 1/4W, 5%	81349	RC07GF202J
R823	000561	RES, CARBON, 560 OHM, 1/4W, 5%	81349	RC07GF561J
R825	000180	RES, CARBON, 18 OHM, 1/4W, 5%	81349	RC07GF180J
R826	000561	RES, CARBON, 560 OHM, 1/4W, 5%	81349	RC07GF561J
R827	P00347621-132	RES, METAL GLAZE, 1.3K, 1/2W, 5%	75042	RG20-132J
R828	P00347621-470	RES, METAL GLAZE, 47 OHM, 1/2W, 5%	75042	RG20-470J
R829	000201	RES, CARBON, 200 OHM, 1/4W, 5%	81349	RC07FG201J
R830	001682	RES, CARBON, 1.5K, 1/2W, 5%	81349	RC20GF152J
R831	000332	RES, CARBON, 3.3K, 1/4W, 5%	81349	RC07GF332J
R832	000331	RES, CARBON, 330 OHM, 1/4W, 5%	81349	RC07GF331J
R834	000103	RES, CARBON, 10K, 1/4W, 5%	81349	RC07GF103J
R835	000472	RES, CARBON, 4.7K, 1/4W, 5%	81349	RC07GF472J
R836	000122	RES, CARBON, 1.2K, 1/4W, 5%	81349	RC07GF122J

P00336100-35, MAIN PCB ASSEMBLY, P25 (Continued) AA

REF. DESIG.	RACAL-DANA P/N	DESCRIPTION	FSC	MFG. P/N
R837	P00347621-112	RES, METAL GLAZE, 1.1K, 1/2W, 5%	75042	RG20-112J
R839	000102	RES, CARBON, 1K, 1/4W, 5%	81349	RC07GF102J
R843	001796	RES, CARBON, 2.7 OHM, 1/4W, 5%	81349	RC07GF2R7J
R846	000470	RES, CARBON, 47 OHM, 1/4W, 5%	81349	RC07GF470J
R847	000470	RES, CARBON, 47 OHM, 1/4W, 5%	81349	RC07GF470J
R848	000560	RES, CARBON, 56 OHM, 1/4W, 5%	81349	RC07GF560J
R850	000470	RES, CARBON, 47 OHM, 1/4W, 5%	81349	RC07GF470J
R902	000272	RES, CARBON, 2.7K, 1/4W, 5%	81349	RC07GF272J
R903	000331	RES, CARBON, 330 OHM, 1/4W, 5%	81349	RC07GF330J
R904	000103	RES, CARBON, 10K, 1/4W, 5%	81349	RC07GF103J
R905	302000003	RES, WW, 1 OHM, 2W, 5%	75042	BWH-1R0J
R906	000302	RES, CARBON, 3K, 1/4W, 5%	81349	RC07GF302J
R907	000302	RES, CARBON, 3K, 1/4W, 5%	81349	RC07GF302J
R908	010039	RES, METAL FILM, 9.09K, 1/2W, 1%	81349	RN60D9091F
R909	P00347679-102	RES, VARIABLE, 1K, 1/4W, 30%	71590	RSV-1K
R910	P00347601-3831	RES, METAL FILM, 3.83K, 1/2W, 1%	01295	MC60D-3831F
R911	000272	RES, CARBON, 2.7K, 1/4W, 5%	81349	RC07GF272J
R912	000331	RES, CARBON, 330 OHM, 1/4W, 5%	81349	RC07GF331J
R913	000103	RES, CARBON, 10K, 1/4W, 5%	81349	RC07GF103J
R914	302000003	RES, WW, 1 OHM, 2W, 5%	75042	BWH-1R0J
R915	000752	RES, CARBON, 7.5K, 1/4W, 5%	81349	RC07GF752J
R916	P00347616-1502	RES, MATCHED PAIR (WITH R917)	21793	P00347616-1502
R917	P00347616-1502	RES, MATCHED PAIR (WITH R916)	21793	P00347616-1502
R918	000471	RES, CARBON, 470 OHM, 1/4W, 5%	81349	RC07GF471J

P00336100-35, MAIN PCB ASSEMBLY, P25 (Continued) AA

REF. DESIG.	RACAL-DANA P/N	DESCRIPTION	FSC	MFG. P/N
R919	000471	RES, CARBON, 470 OHM, 1/4W, 5%	81349	RC07GF471J
VR101	220078	DIODE, ZENER, 5.1V	81349	1N5231
VR102	220078	DIODE, ZENER, 5.1V	81349	1N5231
VR510	P00347350-100	DIODE, ZENER, 10V	07263	1N5240B
VR551	304000060	DIODE, ZENER, 8.1V	04713	1N4738A
VR554	220050	DIODE, ZENER, 2.4V	81349	1N5221
VR601	P00347350-100	DIODE, ZENER, 10V	07263	1N5340B
VR651	304000060	DIODE, ZENER, 8.1V	04713	1N4738A
VR901	304000042	DIODE, ZENER, 6.2V	04713	1N821
VR902	P00347350-150	DIODE, ZENER, 15V	04713	1N5242B
VR903	P00347350-150	DIODE, ZENER, 15V	04713	1N5242B

RACAL-DANA Instruments Inc.

SALES, APPLICATIONS AND SERVICE SUPPORT

RACAL-DANA INSTRUMENTS INC.
4 Goodyear Street
Irvine, California 92718
Telephone: 1-800 RAC-DANA
(714) 859-8999 (In CA)
Fax: (714) 859-2505
TRT: 188715

INTERNATIONAL SERVICE CENTERS

Racal-Dana Instruments Ltd., Hardley Industrial Estate, Hythe, Southampton, Hampshire SO4 6ZH, England, (0703) 843265,Telex:47600
Racal-Dana Instruments S.A., 18 Avenue Dutartre, 78150 Le Chesnay, France (3) 955 88 88. Telex: 697215
Racal-Dana Instruments GmbH, Frankenforster Strasse 21, 5060 Bergisch Gladback 1, Federal Republic of Germany, 2204 60081, Telex: 887 8428
Racal-Dana Instruments Italia srl, Via Mecenate 84/A, 20138 Milano, MI, Italy (02) 5062767/5052686/503444, Telex: 315697

REPAIR REQUEST FORM

To allow us to better understand your repair requests, we suggest you use the following outline and include a copy with your instrument to be sent to your local Racal-Dana repair facility.

Model Number _____ Options _____ Date _____

Serial Number _____ P. O.# _____

Company Name _____

Address _____

City _____ State _____ Zip Code _____

Contact _____ Phone Number _____

1. Describe, in detail, the problem and symptoms you are having.

_____

_____

2. If you are using your unit on the bus, please list the program strings used and the controller type, if possible.

_____

_____

3. List all input levels, and frequencies this failure occurs.

_____

_____

4. Indicate any repair work previously performed.

_____

_____

5. Please give any additional information you feel would be beneficial in facilitating a faster repair time. (I. E., modifications, etc.)

_____

_____

www.manualsplus.com
1026957

SE Laboratories
LOC. S2
MAN - 02795